REVISED STARTING
SERIAL # 120610027

PARTS LIST MANUAL

MODEL SEC

SINGLE-DISC CONCRETE FLOOR GRINDER

SKU #	MODEL #	POWER OPTION
50200	SEC-1.5L	LEESON MOTOR 1.5HP 60Hz 1-PHASE 115/230V
52500	SEC-1.75L/50/1	LEESON MOTOR 1.75HP 50Hz 1-PHASE 110/220V

EDCO®
A Division of Equipment Development Company, Inc.

100 Thomas Johnson Drive, Frederick, MD 21702-4600 USA
Phone (301) 663-1600 • 1-800-638-3326
Fax (301) 663-1607 • 1-800-447-3326
Website: www.edcoinc.com
Email: sales@edcoinc.com

Printed in USA

JWA ©2012

READ AND UNDERSTAND THE OPERATORS INSTRUCTION MANUAL *THOROUGHLY* BEFORE ATTEMPTING TO OPERATE THIS EQUIPMENT.
Death or serious injury could occur if this machine is used improperly.

SAFETY MESSAGES

• Safety Instructions are proceeded by a graphic alert symbol of DANGER, WARNING, or CAUTION.

DANGER Indicates an imminent hazard which, if not avoided, will result in death or serious injury.

WARNING Indicates an imminent hazard which, if not avoided, can result in death or serious injury.

CAUTION Indicates hazards which, if not avoided, could result in serious injury and or damage to the equipment.

GASOLINE/PROPANE POWERED EQUIPMENT

WARNING

• Engine exhaust from this product contains chemicals known to the State of California to cause cancer, birth defects or other reproductive harm.

• Gasoline is extremely flammable and poisonous. It should only be dispensed in well ventilated areas, and with a cool engine.

• Small gasoline engines produce high concentrations of carbon monoxide (CO) example: a 5 HP 4 cycle engine operation in an enclosed 100,000 cu. ft. area with only one change of air per hour is capable of providing deadly concentrations of CO in less than fifteen minutes. Five changes of air in the same area will produce noxious fumes in less than 30 minutes. Gasoline or propane powered equipment should not be used in enclosed or partially enclosed areas. Symptoms of CO poisoning include, headache, nausea, weakness, dizziness, visual problems and loss of consciousness. If symptoms occur - get into fresh air and seek medical attention immediately.

ELECTRICAL POWERED EQUIPMENT

Extreme care must be taken when operating electric models with water present: Ensure power cord is properly grounded, is attached to a Ground-Fault-Interrupter (GFI) outlet, and is undamaged.

• Check all electrical cables - be sure connections are tight and cable is continuous and in good condition. Be sure cable is correctly rated for both the operating current and voltage of this equipment.
• Improper connection of the equipment-grounding conductor can result in a risk of electric shock. Check with qualified electrician or service person if there is any doubt as to whether the outlet is properly grounded. Adhere to **all** local codes and ordinances.
• **NOTE:** In the event of a malfunction or breakdown, grounding provides a path of least resistance for the electric current to dissipate. The motor is equipped with a grounded plug and must be connected to an outlet that is properly installed and properly grounded. DO NOT modify the plug provided on the motor. If the plug does not fit the outlet have a qualified electrician install the proper receptacle.
• Switch motor OFF **before** disconnecting power.
• Do not disconnect power by pulling cord. To disconnect, grasp the plug, not the cord.
• Unplug power cord at the machine when not in use and before servicing.

GENERAL INSTRUCTIONS

• Equipment should only be operated by trained personnel in good physical condition and mental health (not fatigued). The operator and maintenance personnel must be physically able to handle the bulk weight and power of this equipment.
• This is a one person tool. Maintain a safe operating distance to other personnel. It is the **operators' responsibility** to keep other people (workers, pedestrians, bystanders, etc.) away during operation. Block off the work area in all directions with roping, safety netting, etc. for a safe distance. Failure to do so may result in others being injured by flying debris or exposing them to harmful dust and noise.
• This equipment is intended for commercial use only.
• For the operator's safety and the safety of others, always keep all guards in place during operation.
• Never let equipment run unattended.

• Personal Protection Equipment and proper safety attire must be worn when operating this machinery. The operator must wear approved safety equipment appropriate for the job such as hard hat and safety shoes when conditions require. Hearing protection MUST be used (operational noise levels of this equipment may exceed 90db). Eye protection MUST be worn at all times.

Keep body parts and loose clothing away from moving parts. Failure to do so could result in dismemberment or death.

• Do not modify the machine.
• Stop motor/engine when adjusting or servicing this equipment.

Maintain a safe operating distance from flammable materials. Sparks from the cutting-action of this machine can ignite flammable materials or vapors.

DUST WARNING

WARNING

Some dust created by power sanding, sawing, grinding, drilling, and other construction activities contains chemicals known to cause cancer, birth defects, or other reproductive harm. Some examples of these chemicals are:

• Lead from lead-based paints, and
• Crystalline silica from bricks and concrete and other masonry products.

Your risk of exposure to these chemicals varies depending on how often you do this type of work. To reduce your risk: work in a well ventilated area, use a dust control system, such as an industrial-style vacuum, and wear approved personal safety equipment, such as a dust/particle respirator designed to filter out microscopic particles.

100 Thomas Johnson Drive, Frederick, MD 21702-4600 USA
Phone (301) 663-1600 • 1-800-638-3326
Fax (301) 663-1607 • 1-800-447-3326
Website: www.edcoinc.com
Email: sales@edcoinc.com

PARTS LIST MANUAL

MODEL SEC

SINGLE-DISC CONCRETE FLOOR GRINDER

TABLE OF CONTENTS

Section	Page Number
Safety Messages and General Instructions	2
How To Order Replacement Parts	3
Illustration 1: Main Grouping	4, 5
Illustration 2: Water Valve & Hose Grouping	6
Illustration 3: Multi-Accessory Disc Assembly	7
Illustration 4: Tool Box & Multi-Disc Accessories	8
Illustration 5: Dyma-Sert™ & PCDyma-Sert™ Assemblies	9
Illustration 6: Strip-Sert™ Assembly	10
Illustration 7: Optional Pad Driver Assembly	11
Illustration 8: Motor & Belt Drive Grouping	12, 13
Illustration 9: Switch Wiring Diagram	14
Illustration 10: Wiring Diagram for 60Hz Motor	15
Illustration 11: Wiring Diagram for 50Hz Motor	16
Illustration 12: Decals	17
Blank Page	18
Notes	19
Limited Equipment Warranty of Sale - Terms & Conditions	20 (Back Page)

HOW TO ORDER REPLACEMENT PARTS

- To insure product safety and reliability, always use genuine EDCO replacement parts when making repairs to the equipment.
- When calling for parts, specify the MODEL and SERIAL number of the machine, which can be found on the NAME PLATE. Keep that information in the space provided. In addition to this information, give part number, description, and quantity as listed on the parts list to your parts representative.
- Please note: Due to improvements and changes in the equipment, the illustrations shown may be different than the actual machine.

FILL IN INFORMATION BELOW

Date of Purchase _____

Model # _____

Serial # _____

SKU # _____

A Division of Equipment Development Company, Inc.

100 Thomas Johnson Drive, Frederick, MD 21702-4600 USA
Phone (301) 663-1600 • 1-800-638-3326
Fax (301) 663-1607 • 1-800-447-3326
Website: www.edcoinc.com
Email: sales@edcoinc.com

Printed in USA
JWA ©2012

ILLUSTRATION 1 : MAIN GROUPING

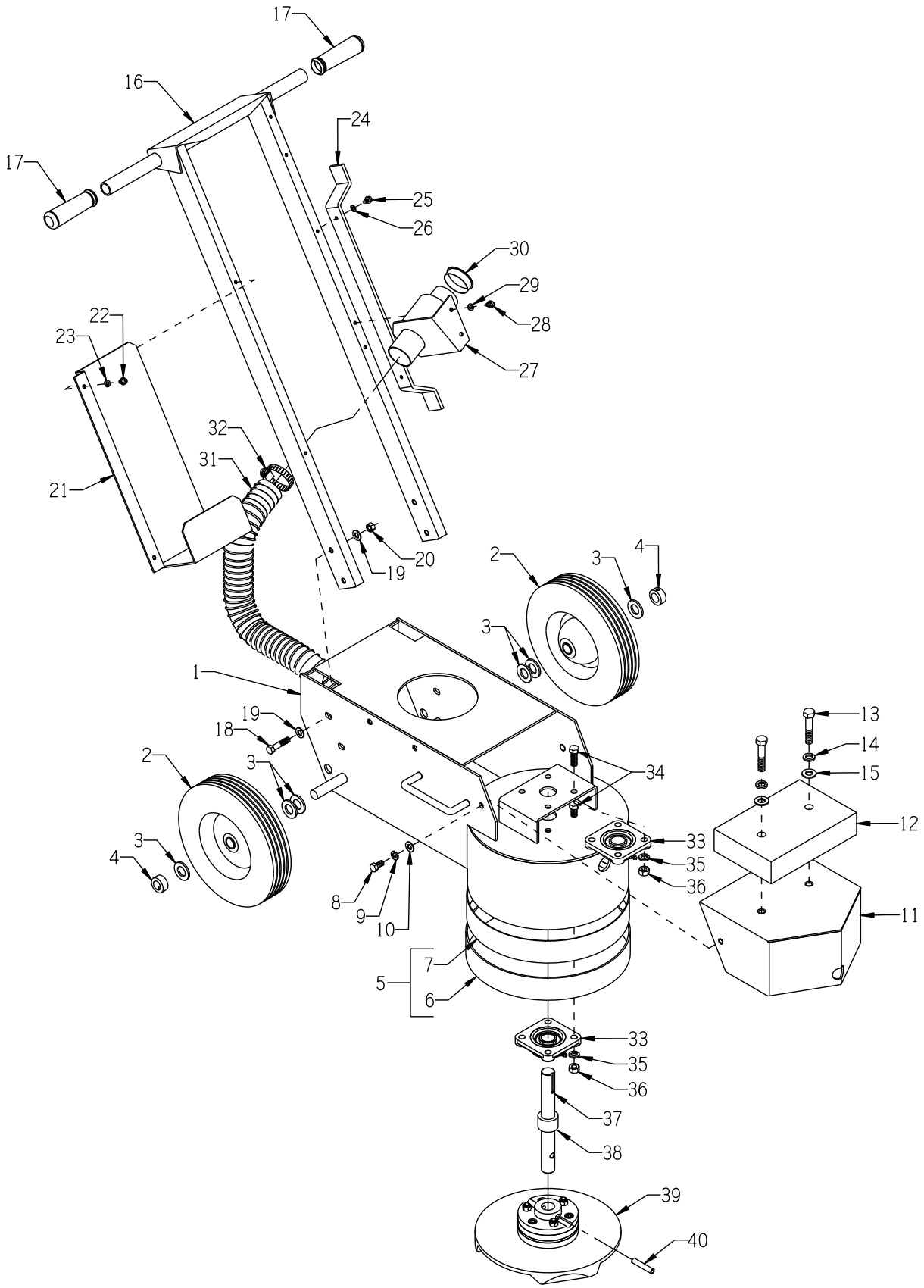

100 Thomas Johnson Drive, Frederick, MD 21702-4600 USA
Phone (301) 663-1600 • 1-800-638-3326
Fax (301) 663-1607 • 1-800-447-3326
Website: www.edcoinc.com
Email: sales@edcoinc.com

PARTS LISTING - ILLUSTRATION 1: MAIN GROUPING

ITEM #	PART #	DESCRIPTION	QTY.
1	86401	MAIN FRAME, SEC(2)	1
2	28003	WHEEL 10 X 2-1/4 X 3/4"BRG, SEC	2
3	10009	WASHER, FLAT 3/4 SAE ZINC	6
4	10428	COLLAR, LOCKING 3/4"ID	2
5	86426K	RUBBER SKIRT W/ VELCRO LOOP & HOOK (INCLUDES ITEMS 6 & 7 TOGETHER)	1
6	86426	RUBBER SKIRT W/ VELCRO-LOOP ONLY, 2 X 39-1/8 (THESE 2 PIECES ARE SEWN TOGETHER)	1
7	86427	VELCRO-HOOK ONLY, 2" X 37-1/2", SEC (THIS PIECE IS PLACED AROUND THE BOTTOM EDGE OF THE SHROUD)	1
8	10907	SCREW, CAP 3/8-16 X 3/4	2
9	10811	WASHER, LOCK 3/8 ZINC	2
10	10025	WASHER, FLAT 3/8 SAE ZINC	2
11	86402	HOOD, SEC(2)	1
12	86345	WEIGHT BLOCK, 30 LB.	1
13	10323	SCREW, CAP 1/2-13 X 2-1/2	2
14	10045	WASHER, LOCK 1/2 ZINC	
15	10312	WASHER, FLAT 1/2 SAE ZINC	2
16	86304S	HANDLE BAR, SEC	1
17	10608	GRIP, HAND 1" MODEL AT	2
18	10029	SCREW, CAP 3/8-24 X 1-3/4	4
19	10025	WASHER, FLAT 3/8 SAE ZINC	8
20	10004	NUT, HEX LOCK 3/8-24 ZINC	4
21	86417	TRAY, TOOL BOX, SEC	1
22	10846	SCREW, CAP STSHW 1/4-20 X 1/2	2
23	10038	WASHER, LOCK 1/4 ZINC	2
24	86419	HOLDER, POWER CORD	1
25	10846	SCREW, CAP STSHW 1/4-20 X 1/2	2
26	10038	WASHER, LOCK 1/4 ZINC	2
27	86347	BRACKET, MULTI-VAC PORT 2-3"	1
28	10846	SCREW, CAP STSHW 1/4-20 X 1/2	2
29	10038	WASHER, LOCK 1/4 ZINC	2
30	65021	CAP/PLUG 2" RED PLASTIC, FLANGED	1
31	77113	HOSE, FLEX 2"ID X 32"L, GRINDERS	1
32	10766	CLAMP, HOSE, SAE #32, ADJ. TO 2-1/2	2
33	77008	BEARING, BALL 1" 4-HOLE FLANGE, ND	2
34	10003	SCREW, CAP 7/16-20 X 1-1/4 ZINC	8
35	10450	WASHER, LOCK 7/16 ZINC	8
36	10481	NUT, HEX 7/16-20 ZINC	8
37	86416	SHAFT, DRIVEN 1" X 9"L, SEC(2)	1
38	86232	SPACER 1-1/2"OD x 1"ID x 1"L", DY-1 & S-EC HEAD	1
39	8888	DISC ASSY. COMPLETE, MULTI-ACCY. RH (REFER TO ILLUSTRATION 3 FOR BREAKDOWN)	1
40	10063	PIN, ROLL 3/8 X 2	1

100 Thomas Johnson Drive, Frederick, MD 21702-4600 USA
Phone (301) 663-1600 • 1-800-638-3326
Fax (301) 663-1607 • 1-800-447-3326
Website: www.edcoinc.com
Email: sales@edcoinc.com

Printed in USA
JWA ©2012

ILLUSTRATION 2: WATER VALVE & HOSE GROUPING

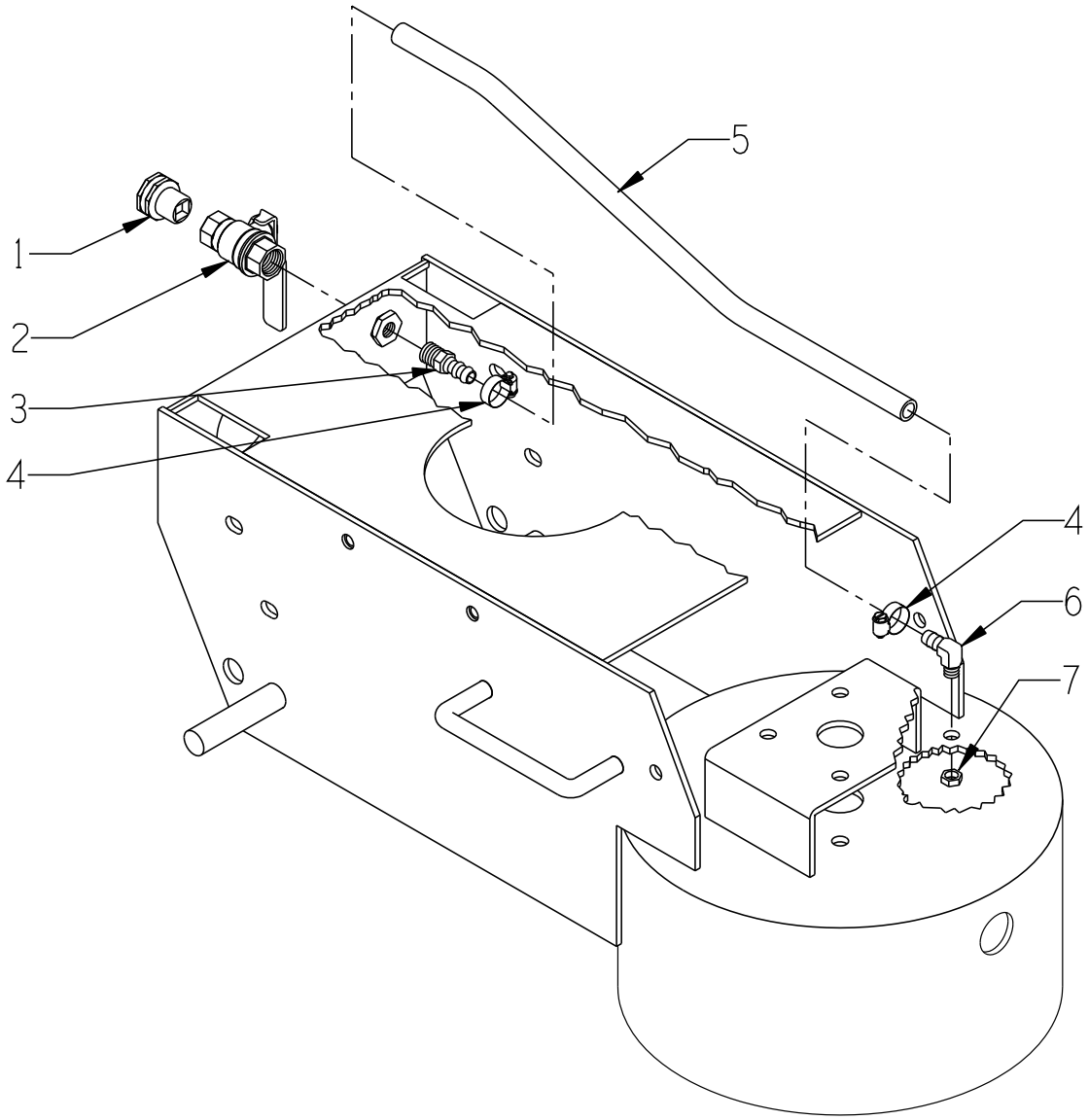

ITEM #	PART #	DESCRIPTION	QTY.
1	80021	CONN., SWIVEL FEM. 3/4HOSE X 1/2MPT	1
2	10711	VALVE, BALL 1/2 FPT	1
3	50075	BARB, 3/8 HOSE X 1/4MPT (BRASS)	1
4	50069	CLAMP, HOSE, SAE #6, ADJ. TO 13/16	2
5	86424	HOSE 3/8”ID X 20”L, SEC	1
6	11562	BARB ELBOW 90, 3/8HOSE X 1/8MPT BRASS	1
7	10864	NUT 1/8-27 PIPE THREAD (BRASS)	1

100 Thomas Johnson Drive, Frederick, MD 21702-4600 USA
Phone (301) 663-1600 • 1-800-638-3326
Fax (301) 663-1607 • 1-800-447-3326
Website: www.edcoinc.com
Email: sales@edcoinc.com

ILLUSTRATION 3: MULTI-ACCESSORY DISC ASSEMBLY

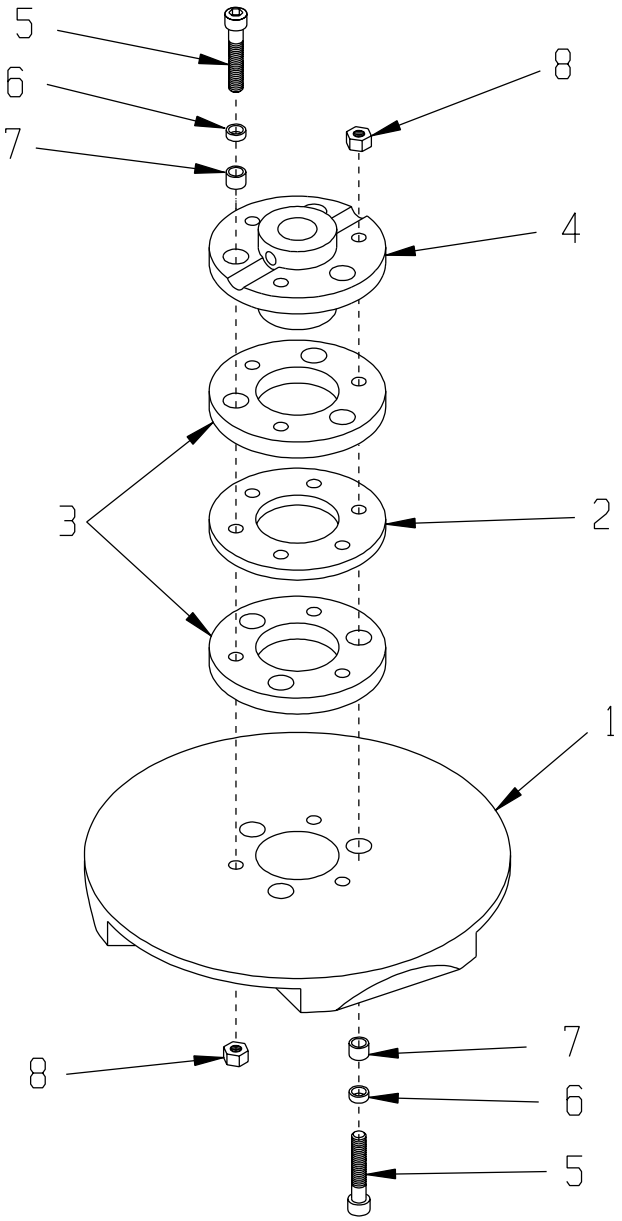

ITEM #	PART #	DESCRIPTION	QTY.
1-8	8888	DISC ASSEMBLY COMPLETE, RIGHT-HAND (ITEMS 1 THRU 8)	1
1	77088	DISC ONLY, MULTI-ACCY. R.H.	1
2	77020	RING, HUB CARRIER, 6-HOLE	1
3	10112	RING, RUBBER, 4-1/2”OD X 1/2”THK	2
4	77010	HUB, ALUMINUM 6-HOLE (GRINDER)	1
5	10114	SCREW, SKT. HD. CAP 3/8-24 X 2-1/4	6
6	10113	SPACER, STEEL 9/16OD X 3/8ID X 7/32”	6
7	10011	SPACER, STEEL 5/8OD X 3/8ID X 3/8”	6
8	10058	NUT, HEX LOCK 3/8-24 W/ NYLON PATCH	6

100 Thomas Johnson Drive, Frederick, MD 21702-4600 USA
Phone (301) 663-1600 • 1-800-638-3326
Fax (301) 663-1607 • 1-800-447-3326
Website: www.edcoinc.com
Email: sales@edcoinc.com

Printed in USA
JWA ©2012

ILLUSTRATION 4: TOOL BOX & MULTI-DISC ACCESSORIES

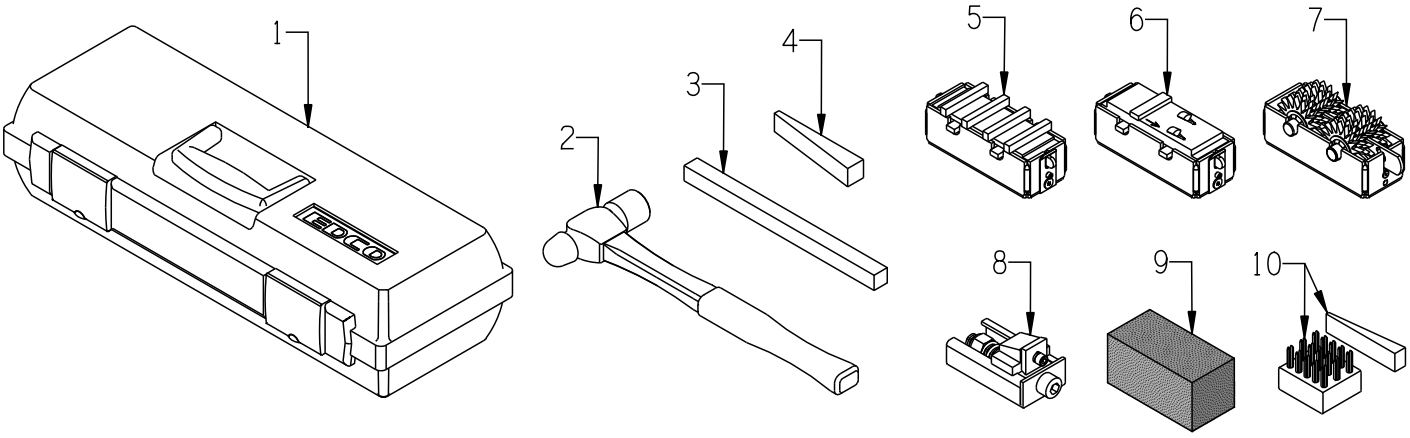

NOTE: REFER TO EDCO PRICE LIST FOR START-UP PAKS AND QUANTITIES			
ITEM #	PART #	DESCRIPTION	QTY.*
1-3	12004 12005	TOOL BOX W/ HAMMER & PUNCH, BLACK TOOL BOX W/ HAMMER & PUNCH, RED	1 1
1	12001 12002	TOOL BOX, BLACK (DYMA-SERTS™) TOOL BOX, RED (STRIP-SERTS™)	1 1
2	12003	HAMMER, BALL PEIN 16 OZ.	1
3	12006	PUNCH, GRINDER WEDGE, 5/8SQ X 9	1
4	12160	WEDGE CG225, HARDWOOD	3
5	-----	DYMA-SERT™ ACCY. W/ HOLDING CASE (SEE ILLUS. 5 FOR MORE DETAILS)	3
6	-----	PCDYMA-SERT™ ACCY. W/ HOLDING CASE (SEE ILLUS. 5 FOR MORE DETAILS)	3
7	 12114 12120 12130	SCARIFIER ACCESSORY: CG221 SCARIFIER HOLDING CASE ONLY CG222 TAW SCARIFIER, STANDARD INSERT CG223 TAW SCARIFIER, HEAVY-DUTY INSERT	3
8	12400	STRIP-SERT™ ASSEMBLY (SEE ILLUS. 6 FOR MORE DETAILS)	3
9	 11074 11014 11024 11034 11084	CG224V VITRIFIED GRINDING STONES: C10S SUPER COARSE C10 COARSE C24 MEDIUM C80 FINE C120 SUPER FINE	3
10	12170 12180	CG101 WIRE BRUSH W/JR322 WEDGE WEDGE ONLY JR322, HARDWOOD	3 3
* QUANTITIES ARE THE NUMBER REQUIRED FOR 1-DISC GRINDER			

100 Thomas Johnson Drive, Frederick, MD 21702-4600 USA
Phone (301) 663-1600 • 1-800-638-3326
Fax (301) 663-1607 • 1-800-447-3326
Website: www.edcoinc.com
Email: sales@edcoinc.com

ILLUSTRATION 5: DYMA-SERT™ & PCDYMA-SERT™ ASSEMBLIES

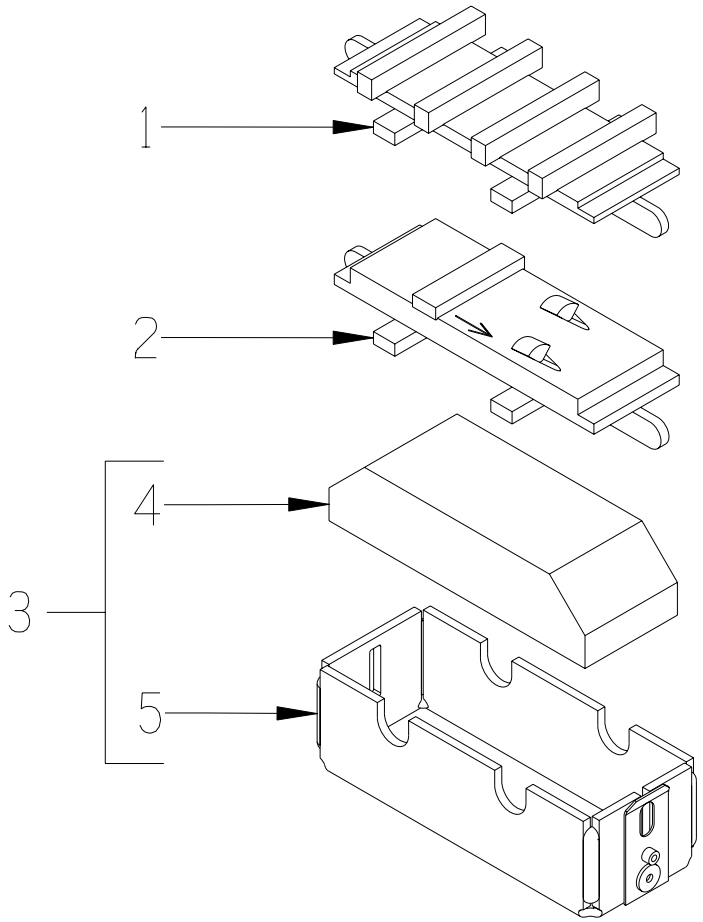

ITEM #	PART #	DESCRIPTION	QTY.*
1		DYMA-SERT™ (SOLD SEPARATELY):	3
	19110	EG-1X, 30-40 GRIT (GENERAL PURPOSE)	
	19130	EG-2X, 30-40 GRIT (ABRASIVE CONCRETE)	
	19180	EG-3X, 30-40 GRIT (EPOXY MORTARS)	
	19250	EG-5X, 50 GRIT (TERRAZZO)	
	19260	EG-7X, 80 GRIT (TERRAZZO)	
	19270	EG-9X, 120 GRIT (TERRAZZO)	
	19290	EG-23X, 200-230 GRIT (POLISHING)	
2	EDP2PCD-30	PCDYMA-SERT™ (SOLD SEPARATELY)	3
3	19120	CG221D DYMA-SERT HOLDING CASE W/PAD	3
4	19140	RUBBER SHOCK PAD	3
5	19121	DYMA-SERT™ HOLDING CASE	3
* QUANTITIES BASED ON 1-DISC GRINDER			

100 Thomas Johnson Drive, Frederick, MD 21702-4600 USA
Phone (301) 663-1600 • 1-800-638-3326
Fax (301) 663-1607 • 1-800-447-3326
Website: www.edcoinc.com
Email: sales@edcoinc.com

Printed in USA
JWA ©2012

ILLUSTRATION 6: STRIP-SERT™ ASSEMBLY

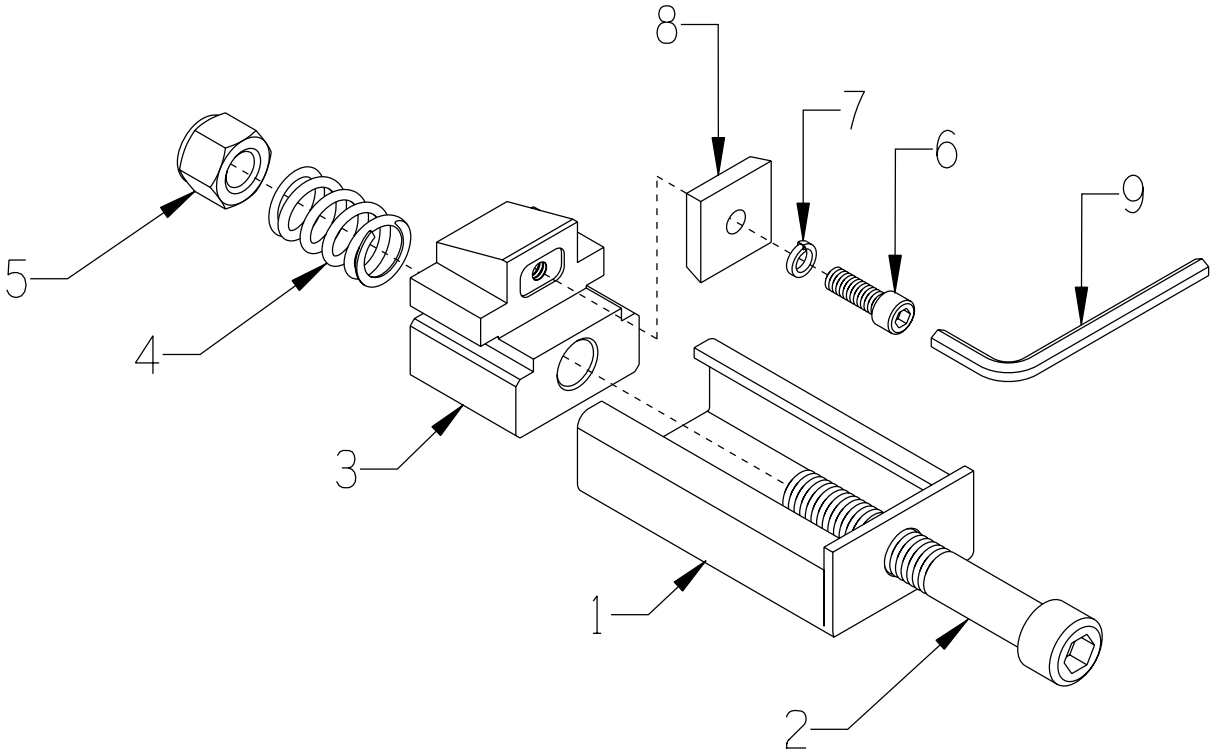

ITEM #	PART #	DESCRIPTION	QTY.
1-8	12400	STRIP-SERT ASSY. WITH PRO TUNGSERT	3*
1-7	12401	STRIP-SERT ASSY. WITHOUT PRO TUNGSERT	3*
1	12404	TUNGSERT HOLDER BOX, STRIP-SERT	1**
2	12405	SCREW, SKT.HD.CAP 1/2-13 X 3.5,GR.5	1**
3	12403	TUNGSERT BLOCK, STRIP-SERT	1**
4	12406	SPRING, COMP. .765”OD X 1.25”FL	1**
5	10155	NUT, HEX NYLON LOCK 1/2-13	1**
6	11573	SCREW, SKT. HD. CAP 1/4-20 X 3/4	1**
7	11688	WASHER, HI-COLLAR LOCK .26ID X .363	1**
8	12407	PRO TUNGSERT (PACK OF 6) INCLUDES: 6 SCREWS & WASHERS, ITEMS 6 & 7 & 1 HEX WRENCH, ITEM 9.	1**
9	12413	WRENCH, HEX L-KEY 3/16”, SHORT-ARM	1
* QUANTITIES BASED ON 1-DISC GRINDER ** QUANTITIES BASED ON 1 STRIP-SERT ACCESSORY			

100 Thomas Johnson Drive, Frederick, MD 21702-4600 USA
Phone (301) 663-1600 • 1-800-638-3326
Fax (301) 663-1607 • 1-800-447-3326
Website: www.edcoinc.com
Email: sales@edcoinc.com

ILLUSTRATION 7: OPTIONAL PAD DRIVER DISC ASSEMBLY

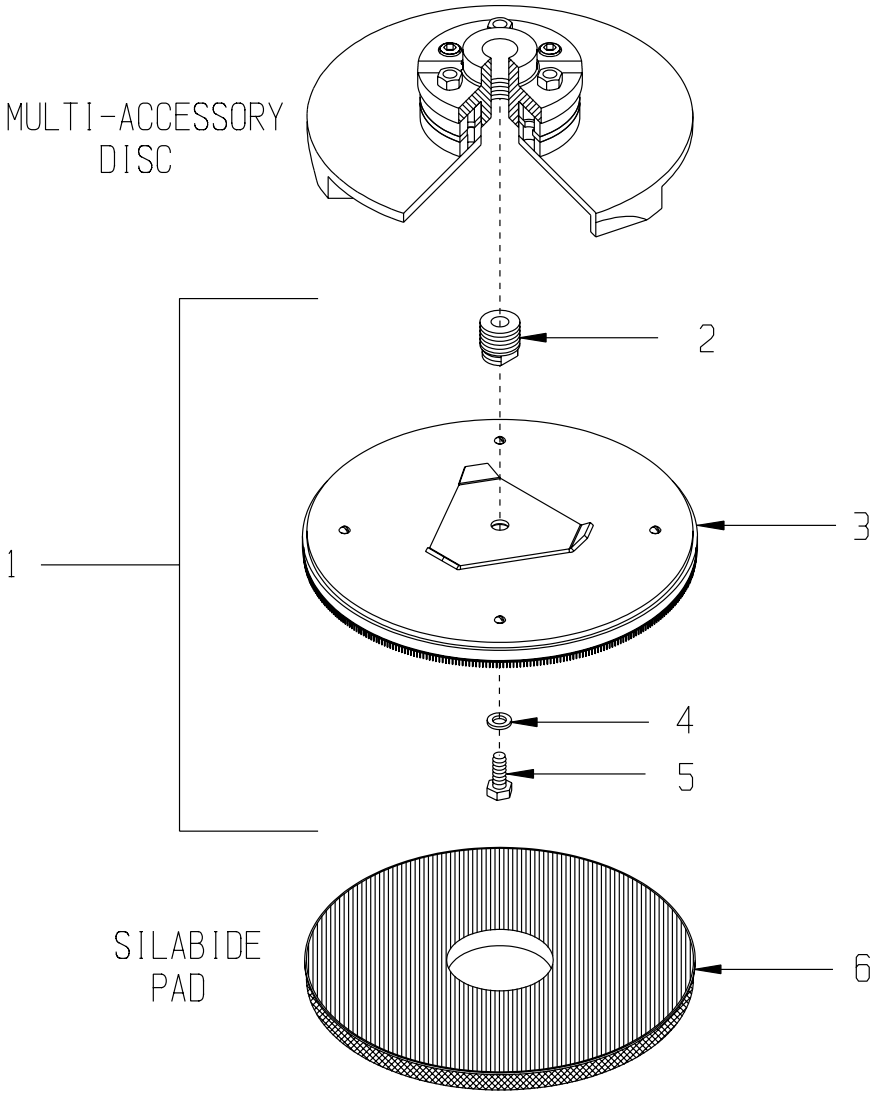

ITEM #	PART #	DESCRIPTION	QTY.*
1	76040	PAD DRIVER DISC ASSEMBLY (INCLUDES ITEMS 2 THRU 5)	1
2	76042	HUB STUD, PAD DRIVER (GRINDER)	1
3	76041	DISC ONLY 11”, PAD DRIVER	1
4	10312	WASHER, FLAT 1/2 SAE ZINC	1
5	10304	SCREW, CAP 1/2-20 X 1	1
6	13013	SILABIDE PAD, 11” MEDIUM (NOT INCLUDED W/ ASSEMBLY)	1
*QUANTITIES FOR ITEMS 1 THRU 6 ARE PER 1-DISC GRINDER			

ILLUSTRATION 8: MOTOR & BELT DRIVE GROUPING

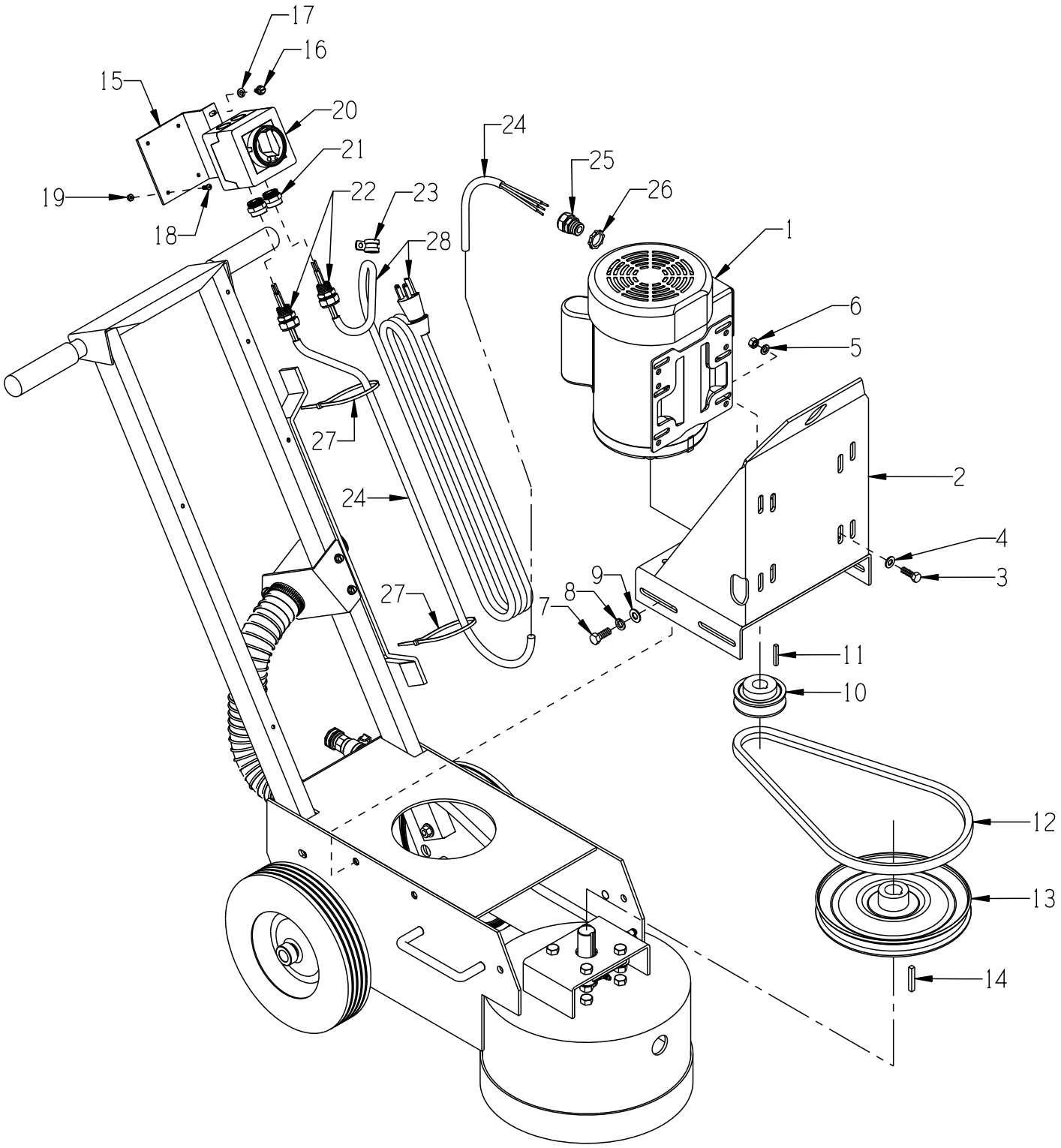

100 Thomas Johnson Drive, Frederick, MD 21702-4600 USA
Phone (301) 663-1600 • 1-800-638-3326
Fax (301) 663-1607 • 1-800-447-3326
Website: www.edcoinc.com
Email: sales@edcoinc.com

PARTS LISTING - ILLUSTRATION 8: MOTOR & BELT DRIVE GROUPING

ITEM #	PART #	DESCRIPTION	QTY.
1	**16035**	**MOTOR, 1.5HP-1PH-60HZ-1725RPM-115/230V-17.2/8.6A**	**1**
		LEESON CAT. NO. 113938.00 RED FARM-DUTY	
		REPLACEMENT PARTS:	
	16178.....	.....CAPACITOR, START, LEESON 003025.15 (500MFD 125V)	1
	16159.....	.....CAPACITOR, RUN, LEESON 003014.20 (20MFD 240V)	1
	16179.....	.....RESET BUTTON, LEESON 300033.02 (CED2705)	1
	16060	**MOTOR, 1.75HP-1PH-50HZ-1425RPM-110/220V**	**1**
		LEESON CAT. NO. 117051.00	
		REPLACEMENT PARTS:	
	16191	.....CAPACITOR, START, LEESON 003025.11 (650MFD 125V)	1
	16183	.....CAPACITOR, RUN, LEESON 003014.13 (65MFD 240V)	2
	16133	.....RESET BUTTON, LEESON 300117.04 (BRJ42DA)	1
2	86404	MOUNT, MOTOR	1
3	10806	SCREW, CAP 5/16-18 X 1	4
4	10213	WASHER, FLAT 5/16 SAE ZINC	4
5	10801	WASHER, LOCK 5/16 ZINC	4
6	10054	NUT, HEX 5/16-18 ZINC	4
7	10055	SCREW, CAP 3/8-16 X 1	4
8	10811	WASHER, LOCK 3/8 ZINC	4
9	10025	WASHER, FLAT 3/8 SAE ZINC	4
10	77017	SHEAVE 3”OD X 1GR.B X 7/8”BORE	1
11	-----	KEY 3/16”SQ. X 1-3/8 (INCLUDED W/ MOTOR)	1
12	10277	BELT B-38	1
13	86009	SHEAVE 9” OD X 1GR.B X 1” BORE	1
14	40317	KEY 1/4SQ X 1-5/8	1
15	77042	BRACKET, LOVATO ROTARY CAM SWITCH	1
16	10846	SCREW, CAP STSHW 1/4-20 X 1/2	2
17	10038	WASHER, LOCK 1/4 ZINC	2
18	11663	SCREW, MACHINE 8-32 X 1/2 RHCD ZINC	4
19	10462	NUT, KEPS LOCK 8-32 ZINC	4
20	**77043**	**SWITCH, ROTARY CAM ON/OFF, LOVATO**	1
		REPLACEMENT PARTS:	
	77043-2.....	.....SWITCH HANDLE, PADLOCKABLE, LOVATO	1
	77043-4.....	.....GASKET RING, OPERATOR, LOVATO	1
21	77043-1	SWITCH ADAPTER, PG16 TO 1/2”NPT	2
22	40066	STRAIN RELIEF 1/2NPT X .350-.450”	2
23	11690	CLAMP, LOOM, 3/8”	1
24	77045	WIRE HARNESS 12/3 X 42”LOA	1
25	16176	STRAIN RELIEF 3/4NPT X .350-.450”	1
26	10740	CONDUIT LOCK NUT 3/4 NP (LOCATED INSIDE JUNCTION BOX)	1
27	10982	TIE, CABLE, BLACK NYLON 11-1/4”	2
28	86422	CORD W/ PLUG, 25FT. POWER, STRAIGHT STYLE PLUG	1

100 Thomas Johnson Drive, Frederick, MD 21702-4600 USA
Phone (301) 663-1600 • 1-800-638-3326
Fax (301) 663-1607 • 1-800-447-3326
Website: www.edcoinc.com
Email: sales@edcoinc.com

Printed in USA
JWA ©2012

ILLUSTRATION 9: WIRING DIAGRAM FOR SWITCH

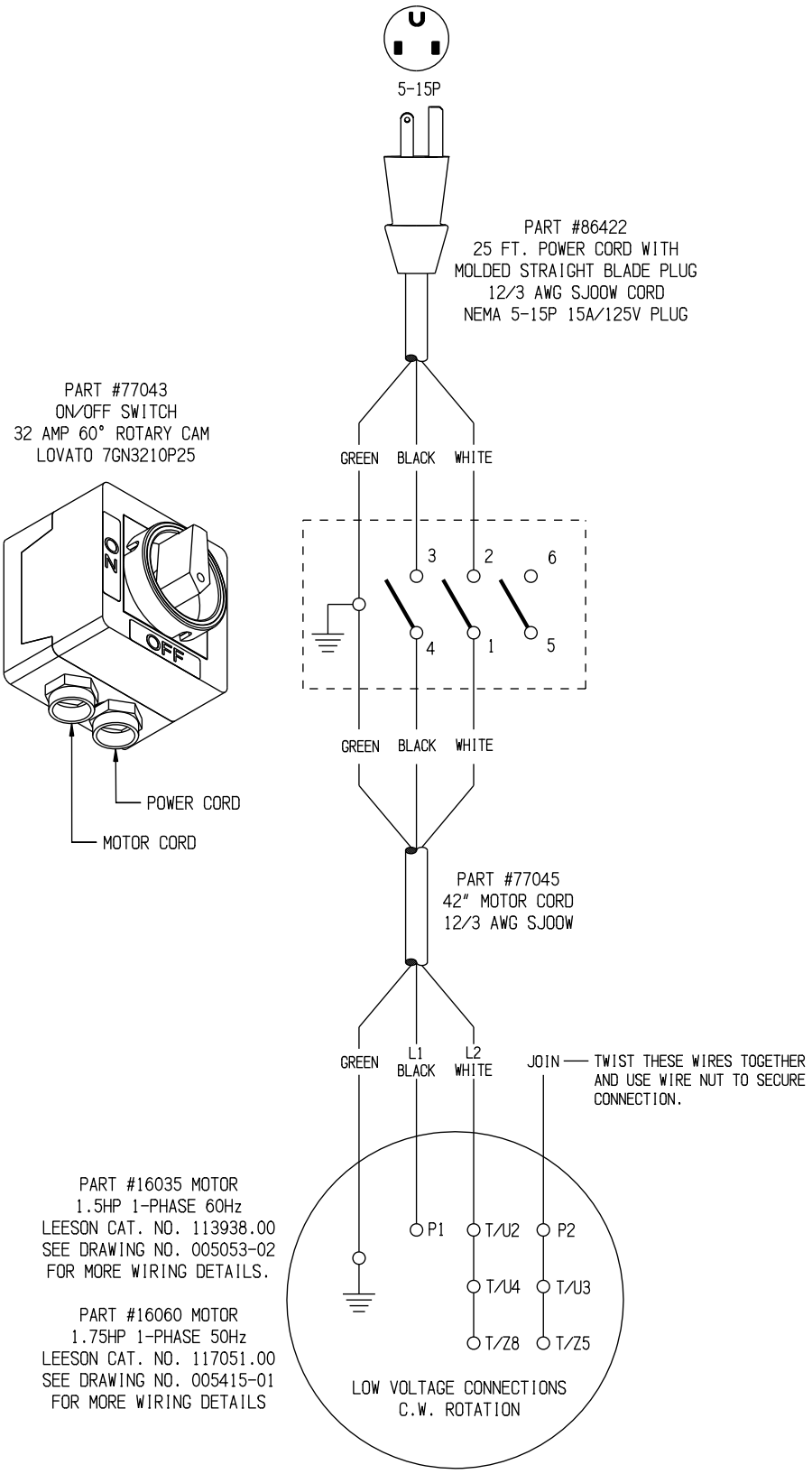

100 Thomas Johnson Drive, Frederick, MD 21702-4600 USA
Phone (301) 663-1600 • 1-800-638-3326
Fax (301) 663-1607 • 1-800-447-3326
Website: www.edcoinc.com
Email: sales@edcoinc.com

ILLUSTRATION 10: WIRING DIAGRAM FOR 60Hz MOTOR

LEESON CAT. NO. 113938.00
1.5 H.P., 1 PHASE, 60 HERTZ, 1725 RPM,
115/230 VOLT, 17.2/8.6 FULL LOAD AMPS

005053–02

VIEW FROM OUTSIDE OF MOTOR AT SWITCH END.

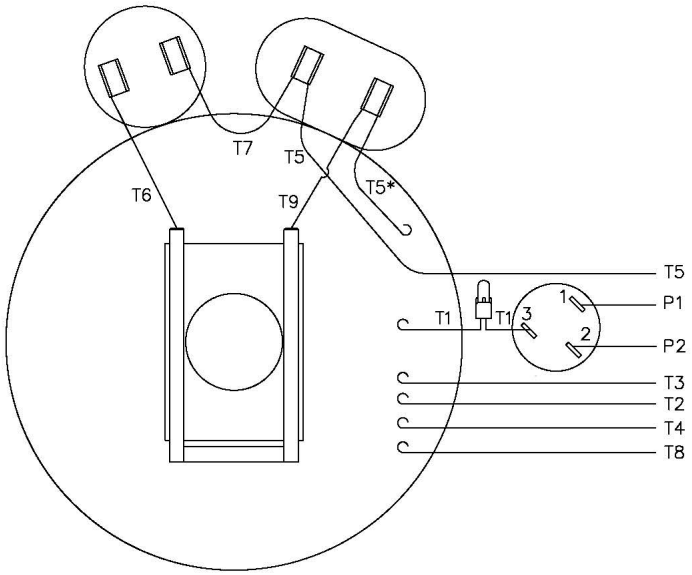

LINE LEADS

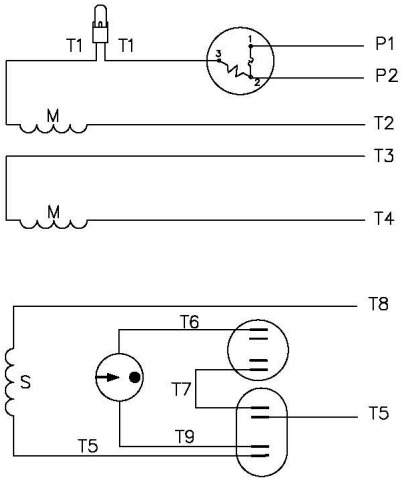

	ROTATION FACING LEAD END	L1	L2	JOIN	INSULATE SEPARATELY
HIGH VOLT	C.C.W.	P1	T4 T5	T2,T3 T8	P2
	C.W.	P1	T4 T8	T2,T3 T5	P2
LOW VOLT	C.C.W.	P1	T2,T4 T5	P2,T3 T8	------
	C.W.	P1	T2,T4 T8	P2,T3 T5	------

* THIS LEAD MAY BE WHITE

NO.	REVISION	BY & DATE
04	ADDED "*" TO T5	RLW 7/22/02
03	REDRAWN ON CAD	DBT 05/27/97

TOLERANCES UNLESS SPECIFIED

DEC.	INCHES
.X	±.1
.XX	±.01
.XXX	±.005
.XXXX	±.0005
ANG	±1/2°

REGAL-BELOIT Motor Technologies Group

TITLE: EXTERNAL WIRING DIAGRAM TYPE "K" W/PROTECTOR

MAT'L. DECAL 004011

FINISH

CAD FILE 00505302

RFP

DIST

DRAWN ADH 06/16/76
CHK WRK 06/30/76
APPD
SCALE 1=1
REF
FMF 6K17FB8A
PREV

SIZE A | DRAWING NO. 005053–02 | REV. 04

THIS DRAWING IN DESIGN AND DETAIL IS OUR PROPERTY AND MUST NOT BE USED EXCEPT IN CONNECTION WITH OUR WORK ALL RIGHTS OF DESIGN AND INVENTION ARE RESERVED
THIS IS AN ELECTRONICALLY GENERATED DOCUMENT – DO NOT SCALE THIS PRINT

6/28/2007 5:11:39 PM -

ILLUSTRATION 11: WIRING DIAGRAM FOR 50Hz MOTOR

LEESON CAT. NO. 117051.00
1.75 H.P., 1 PHASE, 50 HERTZ, 1500 RPM,
110/220 VOLT, 18.8/9.4 FULL LOAD AMPS

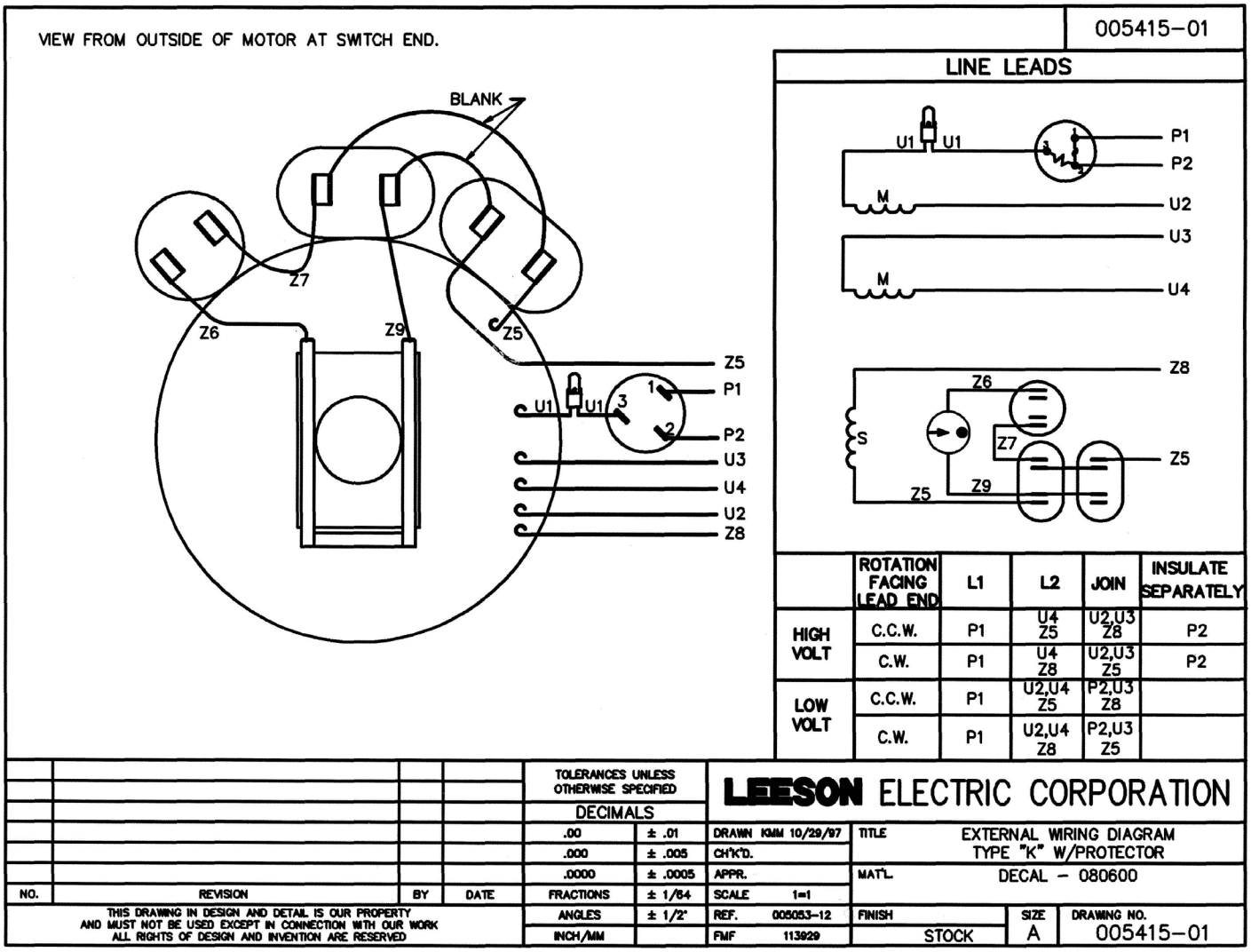

100 Thomas Johnson Drive, Frederick, MD 21702-4600 USA
Phone (301) 663-1600 • 1-800-638-3326
Fax (301) 663-1607 • 1-800-447-3326
Website: www.edcoinc.com
Email: sales@edcoinc.com

ILLUSTRATION 12: DECALS

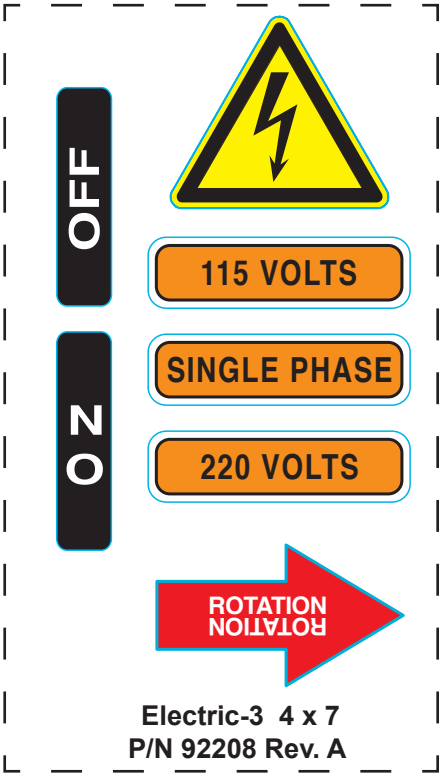

Electric-3 4 x 7
P/N 92208 Rev. A

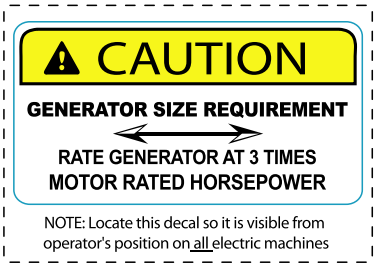

PN: 91326

THIS PAGE WAS LEFT BLANK INTENSIONALLY

©2012 JWA

100 Thomas Johnson Drive, Frederick, MD 21702-4600 USA
Phone (301) 663-1600 • 1-800-638-3326
Fax (301) 663-1607 • 1-800-447-3326
Website: www.edcoinc.com
Email: sales@edcoinc.com

NOTES

Record here any repairs or changes made to the Equipment

A Division of Equipment Development Company, Inc.

100 Thomas Johnson Drive, Frederick, MD 21702-4600 USA
Phone (301) 663-1600 • 1-800-638-3326
Fax (301) 663-1607 • 1-800-447-3326
Website: www.edcoinc.com
Email: sales@edcoinc.com

Printed in USA
JWA ©2012

LIMITED EQUIPMENT WARRANTY OF SALE – TERMS & CONDITIONS

Equipment Development Company, Inc. herein referred to as EDCO (Seller) warrants that each new unit manufactured by EDCO to be free from defects in material and workmanship in normal use and service for a period of (1) one year (except for the cutter drum assembly on all model concrete/asphalt planes, in which case the warranty period shall be 90 days) from date of shipment to the original retail or equipment rental center owner.

Accessories or equipment furnished and installed on the product by EDCO but manufactured by others, including, but not limited to engines, motors,electrical components, transmissions etc., shall carry the accessory manufacturers own warranty.

EDCO will, at its option, repair or replace, at the EDCO factory or at a point designated by EDCO, any part which shall appear to the satisfaction of EDCO inspection to have been defective in material or workmanship.

EDCO reserves the right to modify, alter and improve any part or parts without incurring any obligation to replace any part or parts previously sold without such modified, altered or improved part or parts.

This warranty is in lieu of and excludes all other warranties, expressed, implied, statutory, or otherwise created under applicable law including, but not limited to the warranty of merchantability and the warranty of fitness for a particular purpose in no event shall seller or the manufacturer of the product be liable for special, incidental, or consequential damages, including loss of profits, whether or not caused by or resulting from the negligence of seller and/or the manufacturer of the product unless specifically provided herein. In addition, this warranty shall not apply to any products or portions there of which have been subjected to abuse, misuse, improper installation, maintenance, or operation, electrical failure or abnormal conditions and to products which have been tampered with, altered, modified, repaired, reworked by anyone not approved by seller or used in any manner inconsistent with the provisions of the above or any instructions or specifications provided with or for the product

FORCE MAJEURE

Seller's obligation hereunder are subject to, and Seller shall not be held responsible for, any delay or failure to make delivery of all or any part of the Product due to labor difficulties, fires, casualties, accidents, acts of the elements, acts of God, transportation difficulties, delays by a common carrier, inability to obtain Product, materials or components or qualified labor sufficient to timely perform part of or all of the obligations contained in these terms and conditions, governmental regulations or actions, strikes, damage to or destruction in whole or part of manufacturing plant, riots, terrorist attacks or incidents, civil commotions, warlike conditions, flood , tidal waves, typhoon, hurricane, earthquake, lightning, explosion or any other causes, contingencies or circumstances within or without the United States not subject to the Seller's control which prevent or hinder the manufacture or delivery of the Products or make the fulfillment of these terms and conditions impracticable. In the event of the occurrence of any of the foregoing, at the option of Seller, Seller shall be excused from the performance under these Terms and Conditions, or the performance of the Seller shall be correspondingly extended.

This document sets forth the terms and conditions pursuant to which the purchaser ("Purchaser") will purchase and Equipment Development Co.Inc. ("Seller")will sell the products, accessories, attachments (collectively the Products ") ordered by the Purchaser. These terms and conditions shall govern and apply to the sale of Seller's Products to Purchaser, regardless of any terms and conditions appearing on any purchase order or other forms submitted by Purchaser to Seller, or the inconsistency of any terms therein and herein.

1. PRICE

All prices set forth on any purchase order or other document are F.O.B. Sellers facility or distribution point, as may be determined by Seller (F.O.B.Point). All prices are exclusive of any and all taxes, including, but not limited to, excise, sales, use, property or transportation taxes related to the sale or use of the Products, now or hereafter imposed, together with all penalties and expenses. Purchaser shall be responsible for collecting and/or paying any and all such taxes, whether or not they are stated in any invoice for the Products. Unless otherwise specified herein, all prices are exclusive of inland transportation, freight, insurance and other costs and expenses relating to the shipment of the Products from the F.O.B. point to Purchaser's facility. Any prepayment by Seller of freight insurance and other costs shall be for the account of Purchaser and shall be repaid to Seller.

2. PAYMENT TERMS

Payment terms are as follows. 2% 10 days (to approved and qualified accounts). Net 30 days. This is a cash discount for invoices paid within 10 days after the invoice date, regardless of date of receipt of shipment. This is not a trade discount and will not be granted to accounts that do not adhere to stated terms.

*All past due accounts are subject to a late payment fee of 1.5% per month or a maximum allowed by law if different, along with the expenses incidental to collection including reasonable attorney's fees and costs.

*Seller reserves the right to hold shipments against past due accounts.

*Seller reserves the right to alter payment terms.

3. FREIGHT TERMS

All shipments will be made F.O.B. shipping point as designated in these Terms and Conditions, and title shall pass at the F.O.B. point. Delivery to the initial common carrier shall constitute delivery to the Purchaser. Any claims for loss or damage during shipment are to be filed with carrier by the Purchaser. Seller will not assume responsibility for the performance of the carrier.

Back orders will be shipped in the most practical fashion with charges consistent with our freight policy established with the original order. UPS, FED EX, MAIL or shipments by other couriers are subject to the same terms and conditions as outlined in paragraph #3"Freight Terms".

4. DELIVERY, DAMAGES, SHORTAGES

Seller shall use reasonable efforts to attempt to cause the Products to be delivered as provided for in these Terms & Conditions. Delivery to the initial common carrier shall constitute the delivery to the Purchaser. Sellers responsibility, in so far as transportation risks are concerned ceases upon the delivery of the Products in good condition to such carrier at the F.O.B. point and all the Products shall be shipped at the Purchaser's risk. Seller shall not be responsible or liable for any loss of income and/or profits, or incidental, special, consequential damages resulting from Seller's delayed performance in shipment and delivery.

5. RETURN OF DEFECTIVE PRODUCTS

Defective or failed material shall be held at the Purchaser's premises until authorization has been granted by Seller to return or dispose of Products. Products that are to be returned for final inspection must be returned Freight Prepaid in the most economical way. Credit will be issued for material found to be defective upon Seller's inspection based on prices at time of purchase.

6. PRODUCTS ORDERED IN ERROR

Products may be returned, provided that claim is made and Seller is notified within 7 days of receipt of Products, and the Products are in original buyer's possession not more than 30 days prior to return, subject to Seller's approval. If Products are accepted for return, they must be Freight Prepaid and buyer will be charged a minimum of 15% restocking charge, plus a charge back for outbound freight charges if the original order was shipped prepaid. Returns are not accepted for any Products that are specifically manufactured to meet the buyer's requirement of either specifications or quantity.

AGREEMENTS

These Terms and Conditions constitute the entire agreement between Seller and Purchaser as it relates to terms and conditions of sale, and supersedes any and all prior oral or written agreements, correspondence, quotations or understandings heretofore in force between the parties relating to the subject matter hereof. There are no agreements between Seller and Purchaser with respect to the Product herein except those specifically set forth in and made part of these terms and conditions. Any additional terms, conditions and/or prices are rejected by Seller.

These terms and conditions may be modified, cancelled or rescinded only by a written agreement of both parties executed by their duly authorized agents.

USE ONLY GENUINE EDCO PARTS & ACCESSORIES

For your own safety, the safety of others and the life of your machine.

Equipment Development Company, Inc.

100 Thomas Johnson Drive, Frederick, MD 21702-4600 USA
Phone (301) 663-1600 • 1-800-638-3326
Fax (301) 663-1607 • 1-800-447-3326
Website: www.edcoinc.com
Email: sales@edcoinc.com

Printed in USA

©2012 JWA