REVISED STARTING
SERIAL # 250910136

PARTS LIST MANUAL

MODEL SEC-NG

SINGLE-DISC FLOOR GRINDERS

SKU #	MODEL #	POWER OPTION
59800	SEC-NG	LEESON MOTOR 1.5HP 60Hz 1-PHASE
59900	SEC-NG	LEESON MOTOR 1.75HP 50Hz 1-PHASE

READ AND UNDERSTAND THE OPERATOR'S SAFETY MANUAL THOROUGHLY BEFORE ATTEMPTING TO OPERATE THIS EQUIPMENT.

Death or serious injury could occur if this machine is used improperly.

Machine specific Operator's Instruction Manuals are offered at edcoinc.com/customer-support

READ AND UNDERSTAND THE ENGINE MANUFACTURERS INSTRUCTIONS AND OPERATORS MANUAL BEFORE OPERATION.

EQUIPMENT DEVELOPMENT COMPANY, INC.
100 Thomas Johnson Drive, Frederick, MD 21702-4600 USA
Phone: 800-638-3326 or 301-663-1600 • Fax: 800-447-3326 or 301-663-1607
Website: www.edcoinc.com • E-mail: techsupport@edcoinc.com

Printed in USA
JWA ©2025

SAFETY INFORMATION

SAFETY MESSAGES

• Safety Instructions are proceeded by a graphic alert symbol of DANGER, WARNING, or CAUTION.

DANGER Indicates an imminent hazard which, if not avoided, will result in death or serious injury.

WARNING Indicates an imminent hazard which, if not avoided, can result in death or serious injury.

CAUTION Indicates hazards which, if not avoided, could result in serious injury and or damage to the equipment.

GASOLINE / PROPANE POWERED EQUIPMENT

WARNING • Engine exhaust from this product contains chemicals known to the State of California to cause cancer, birth defects or other reproductive harm.

WARNING • Tilting a gasoline powered machine fitted with an EPA approved vented charcoal filter gas cap, beyond 20° can cause fuel leakage. If a leak occurs, do not start or run the engine until the leak is fixed. Eliminate all other ignition sources in the immediate area (no smoking, flares, sparks or flames). Use approved gasoline absorbing material to contain the fuel leakage. Then use clean, non-sparking tools to collect absorbed materials then dispose of these contaminants properly.

• Gasoline is extremely flammable and poisonous. It should only be dispensed in well ventilated areas, and with a cool engine.

• Small gasoline engines produce high concentrations of carbon monoxide (CO) example: a 5 HP 4 cycle engine operation in an enclosed 100,000 cu. ft. area with only one change of air per hour is capable of providing deadly concentrations of CO in less than fifteen minutes. Five changes of air in the same area will produce noxious fumes in less than 30 minutes. Gasoline powered equipment should not be used in enclosed or partially enclosed areas. Symptoms of CO poisoning include, head-ache, nausea, weakness, dizziness, visual problems and loss of consciousness. If symptoms occur - get into fresh air and seek medical attention immediately.

- Never refuel a hot engine or an engine while it is running.
- Engines are shipped from factory without fuel/oil.

• Propane is extremely flammable and is heavier than air and tends to settle in low areas where a spark or flame could ignite gas. DO NOT start or operate this propane engine in a poorly ventilated area where leaking propane gas could accumulate and endanger safety of persons in area. If headache develops, shut off machine. Have it checked for carbon monoxide emissions by a qualified technician before using it again. To ensure personal safety, installation and repair of propane fuel supply systems must be performed only by qualified technicians. Carbon monoxide emissions from this machine are greatly increased due to a dirty combustion air cleaner.

ELECTRICAL POWERED EQUIPMENT

Extreme care must be taken when operating electric models with water present: Ensure power cord is properly grounded, is attached to a Ground-Fault-Interrupter (GFI) outlet, and is undamaged.

- Check all electrical cables - be sure connections are tight and cable is continuous and in good condition. Be sure cable is correctly rated for both the operating current and voltage of this equipment.
- Improper connection of the equipment grounding conductor can result in a risk of electric shock. Check with qualified electrician or service person if there is any doubt as to whether the outlet is properly grounded. Adhere to <u>all</u> local codes and ordinances.
- NOTE: In the event of a malfunction or breakdown, grounding provides a path of least resistance for the electric current to dissipate. The motor is equipped with a grounded plug and must be connected to an outlet that is properly installed and properly grounded. DO NOT modify the plug provided on the motor. If the plug does not fit the outlet have a qualified electrician install the proper receptacle.

ELECTRICAL POWERED EQUIPMENT CONTINUED

- Do not disconnect power by pulling cord. To disconnect, grasp the plug, not the cord.
- Unplug power cord at the machine when not in use and before servicing.
- Switch motor OFF <u>before</u> disconnecting power.
- Never use frayed, damaged, taped or under rated extension cords. Electrical shock could result in death or serious injury to the operator and damage to the equipment.
- Assure you are using the proper extension cord length.

GENERAL INSTRUCTIONS

- Equipment should only be operated by trained personnel in good physical condition and mental health (not fatigued). The operator and maintenance personnel must be physically able to handle the bulk weight and power of this equipment.
- This is a one person tool. Maintain a safe operating distance to other personnel. It is the <u>operators'</u> <u>responsibility</u> to keep other people (workers, pedestrians, bystanders, etc.) away during operation. Block off the work area in all directions with roping, safety netting, etc.

  Failure to do so may result in others being injured by flying debris or exposing them to harmful dust and noise.
- This equipment is intended for commercial use only.
- For the operator's safety and the safety of others, always keep all guards in place during operation.
- Never let equipment run unattended.

- Personal Protection Equipment and proper safety attire must be worn when operating this machinery. The operator must wear approved safety equipment appropriate for the job such as hard hat and safety shoes when conditions require. Hearing protection MUST be used when operational noise levels of this equipment may exceed 85db. Eye protection MUST be worn at all times.

Keep body parts, loose clothing and accessories away from moving parts. Failure to do so could result in dismemberment or death.

- Do not modify the machine.
- Stop motor/engine when adjusting or servicing this equipment. Maintain a safe operating distance from flammable materials. Sparks from the cutting-action of this machine can ignite flammable materials or vapors.

DUST WARNING

WARNING Some dust created by power sanding, sawing, grinding, drilling, and other construction activities contains chemicals known to cause cancer, birth defects, or other reproductive harm. Materials being removed can be toxic or hazardous. A breathing respirator is required to help protect the operator. Some examples of these chemicals are:

- Lead from lead-based paints.
- Crystalline silica from bricks, concrete and other masonry products.

Your risk of exposure to these chemicals varies depending on how often you do this type of work. To reduce your risk: work in a well ventilated area, use a dust control system, such as an industrial-style vacuum, and wear approved personal safety equipment, such as a dust/particle respirator designed to filter out microscopic particles.

- See more on the importance of dust prevention and silica warnings at: osha.gov/silica
- More concrete and silica dust supression training and educational materials available at edcoinc.com/silica-standards or scan the QR code on page 5.
- Written exposure plans are provided at http://www.edcoinc.com/written-exposure-control-plans/

PARTS LIST MANUAL

MODEL SEC-NG

MAGNA-TRAP® SINGLE-DISC FLOOR GRINDER

TABLE OF CONTENTS

Section	Page Number
Safety Information	2
How To Order Replacement Parts	3
Illustration 1: Main Grouping	4, 5
Illustration 2: Leveling System Grouping	6
Illustration 3: Water Valve & Hose Grouping	7
Illustration 4: 10” Magna-Trap® Disc Assembly	8
Illustration 5: Optional Diamond Disc Adapter	9
Illustration 6: Motor & Belt Drive Grouping	10, 11
Wiring Diagram for Switch	12
Wiring Diagram for 60Hz Motor	13
Wiring Diagram for 50Hz Motor	14
Decal Sheet	15
MAGNA-TRAP® Tooling	16, 17, 18, 19
Limited Equipment Warranty of Sale	21
EDCO’s Online Customer Support	22

HOW TO ORDER REPLACEMENT PARTS

- To insure product safety and reliability, always use genuine EDCO replacement parts when making repairs to the equipment.
- When calling for parts, specify the MODEL and SERIAL number of the machine, which can be found on the NAME PLATE. Keep that information in the space provided. In addition to this information, give part number, description, and quantity as listed on the parts list to your parts representative.
- Please note: Due to improvements and changes in the equipment, the illustrations shown may be different than the actual machine.

FILL IN INFORMATION BELOW

Date of Purchase _____

Model # _____

Serial # _____

SKU # _____

ILLUSTRATION 1: MAIN GROUPING

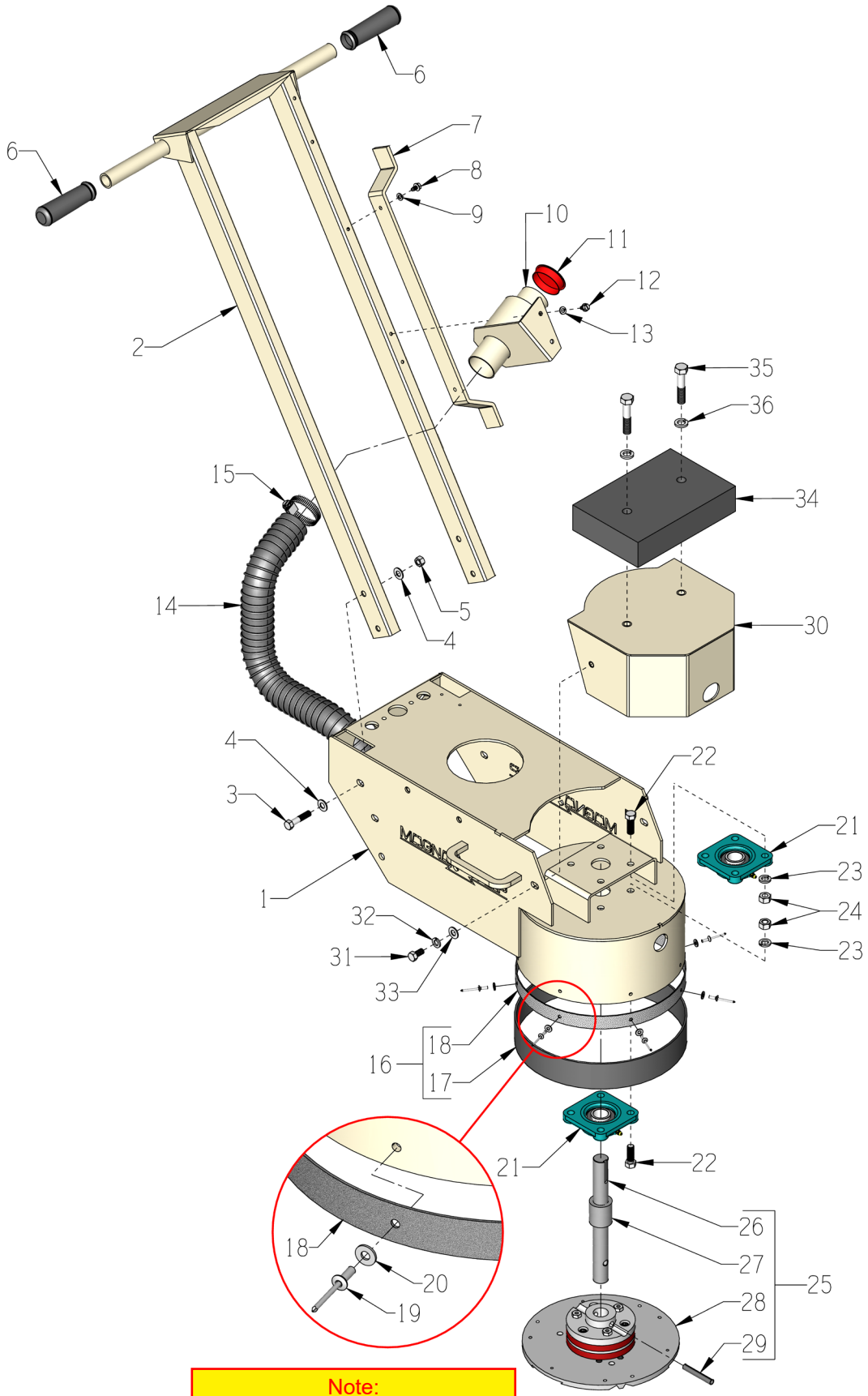

Note:
See pages 16 - 19 for available MAGNA-TRAP® Tooling.

PARTS LISTING - ILLUSTRATION 1: MAIN GROUPING			
ITEM #	PART #	DESCRIPTION	QTY.
1	86901	MAIN FRAME, SEC-NG/HD	1
2	86304S	HANDLE BAR, SEC	1
3	10029	SCREW, CAP 3/8-24 X 1-3/4	4
4	10025	WASHER, FLAT 3/8 SAE ZINC	8
5	10058	NUT, HEX LOCK 3/8-24 W/ NYLON PATCH	4
6	10608	GRIP, HAND 1” MODEL AT	2
7	86419	HOLDER, POWER CORD	1
8	10846	SCREW, CAP STSHW 1/4-20 X 1/2	2
9	10038	WASHER, LOCK 1/4 ZINC	2
10	86347	BRACKET, MULTI-VAC PORT 2-3”	1
11	65021	CAP/PLUG 2” RED PLASTIC, FLANGED	1
12	10846	SCREW, CAP STSHW 1/4-20 X 5/8	2
13	10038	WASHER, LOCK 1/4 ZINC	2
14	77113	HOSE, FLEX 2”ID X 32”L	1
15	10766	CLAMP, HOSE, SAE #32, ADJ. TO 2-1/2	2
16	86426C	RUBBER SKIRT W/ VELCRO & RIVETS (INCLUDES ITEMS 17, 18, 19 & 20 TOGETHER)	1
17	86426	RUBBER SKIRT W/ VELCRO-LOOP 39-1/8” (NOTE: CUT TO 36”)	1
18	86427	VELCRO-HOOK ONLY, 1” X 39” (TRIMMED TO SIZE) NOTE: THIS PIECE IS HELD IN PLACE WITH CONTACT CEMENT, RIVETS AND WASHERS. ITEMS 19 & 20	1
19	10134	RIVET, BLND 3/16X.425”L X.375HD DIA	8
20	10850	WASHER, FLAT #10 SAE ZINC	8
21	77008	BEARING, BALL 1” 4-HOLE FLANGE, ND	2
22	10003	SCREW, CAP 7/16-20 X 1-1/4 ZINC	8
23	10450	WASHER, LOCK 7/16 ZINC	8
24	10481	NUT, HEX 7/16-20 ZINC	8
25	100220	HEAD ASSY., SEC-NG W/ LEV. SYSTEM (INCLUDES ITEMS 26 THRU 29)	1
26	100051	SHAFT 1”DIA. X 9-11/16”L, SEC-NG/HD	1
27	100052	SPACER, HEAD, 1-5/8”L, SEC-NG/HD	1
28	100053	10” MAGNA-TRAP DISC ASSY. W/ HUB (REFER TO ILLUS. 4 FOR BREAKDOWN)	1
29	10007	PIN, ROLL 3/8 X 2-1/2	1
30	86906	HOOD, SEC-NG/HD	1
31	10907	SCREW, CAP 3/8-16 X 3/4	2
32	10811	WASHER, LOCK 3/8 ZINC	2
33	10025	WASHER, FLAT 3/8 SAE ZINC	2
34	86345	WEIGHT BLOCK, 30 LB., SEC & TG10-5B	1
35	10323	SCREW, CAP 1/2-13 X 2-1/2	2
36	10045	WASHER, LOCK 1/2 ZINC	2

ILLUSTRATION 2: LEVELING SYSTEM GROUPING

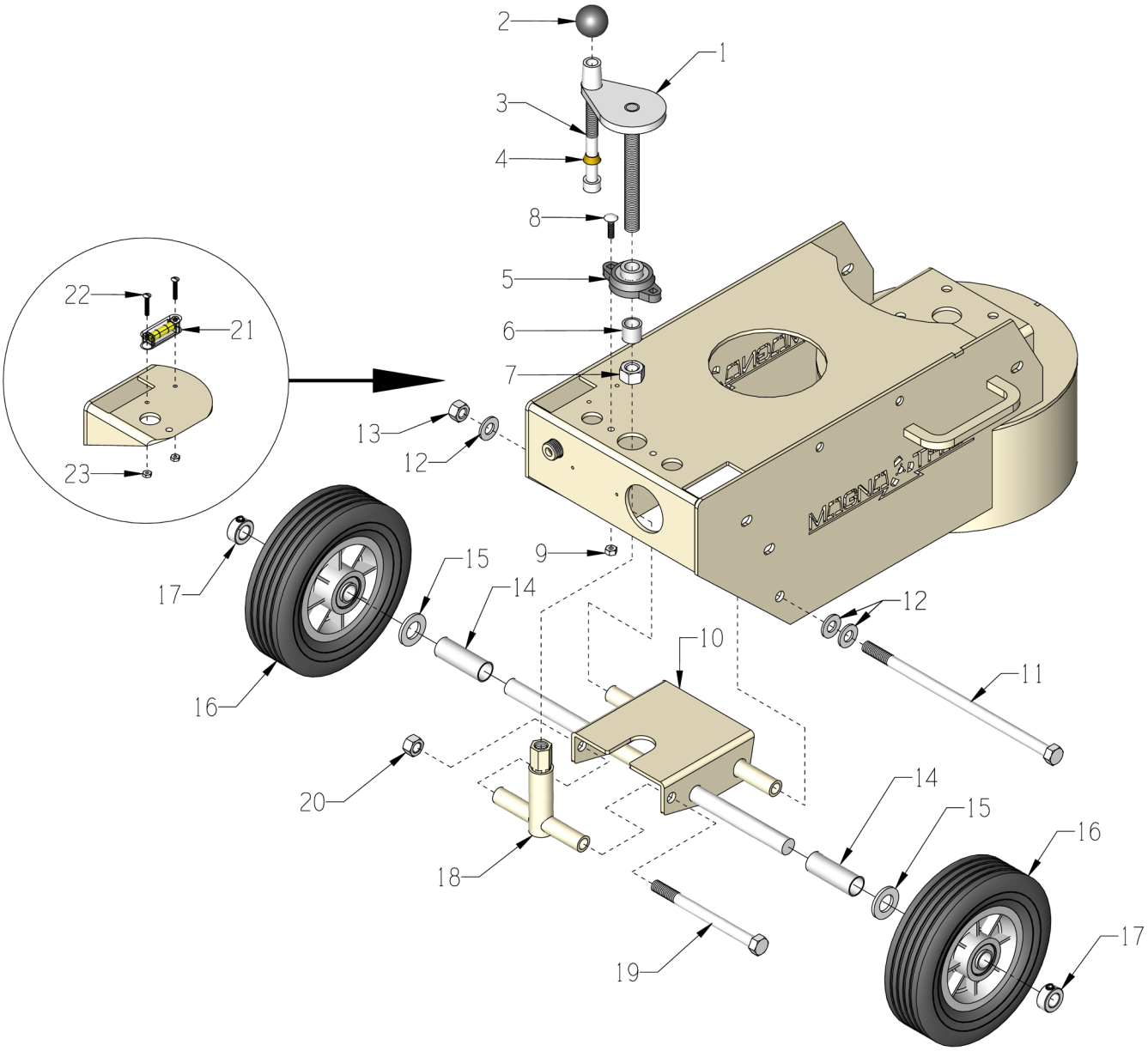

ITEM #	PART #	DESCRIPTION	QTY.
1	86905	KNOB, WHEEL HEIGHT CONTROL	1
2	14023	KNOB, BALL 1-3/8 W/ 1/2-13THD,	1
3	10411	SCREW, SKT. HD. CAP 1/2-13 X 4	1
4	50550	SLEEVE, BRASS 1/2” TAPERED	1
5	80009	BEARING, BALL 5/8” 2-HOLE	1
6	55010	SPACER, HANDWHEEL, 3/4”L	1
7	10046	NUT, HEX 5/8-11 ZINC	1
8	10412	BOLT, CARRIAGE 1/4-20 X 1	2
9	10861	NUT, KEPS LOCK 1/4-20 ZINC	2
10	86702	FORK WELDMENT, SECNG TG10	1
11	10355	SCREW, CAP 1/2-13 X 11	1
12	10312	WASHER, FLAT 1/2 SAE ZINC	3

ITEM #	PART #	DESCRIPTION	QTY.
13	10407	NUT, HEX LOCK 1/2-13 ZINC	1
14	86705	WHEEL SPACER, SECNG TG10	2
15	10009	WASHER, FLAT 3/4 SAE ZINC	2
16	79013	WHEEL, 8 X 2-1/2 X 3/4"BRG.POLY HUB	2
17	10428	COLLAR, LOCKING 3/4”ID	2
18	86904	FORK LINKAGE WELDMENT	1
19	10329	SCREW, CAP 1/2-20 X 6	1
20	10205	NUT, HEX LOCK 1/2-20 ZINC	1
21	59117	LEVEL, SCREW ON	1
22	11871	SCREW, MACHINE FHP 8-32 X 1-1/4	2
23	10462	NUT, KEPS LOCK 8-32 ZINC	2

ILLUSTRATION 3: WATER VALVE & HOSE GROUPING

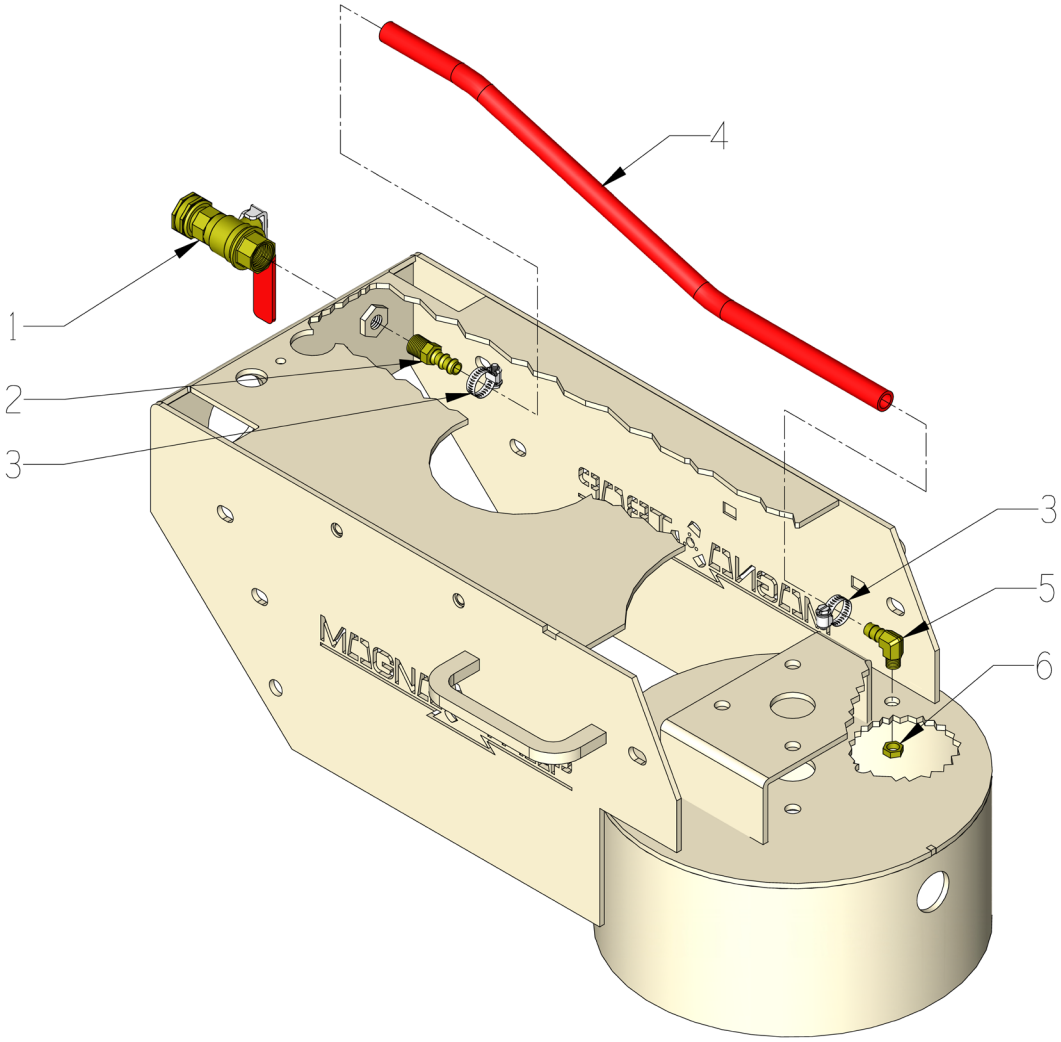

ITEM #	PART #	DESCRIPTION	QTY.
1	10711A	VALVE & HOSE CONNECTOR ASSY.	1
2	50075	BARB, 3/8 HOSE X 1/4MPT (BRASS)	1
3	10714	CLAMP, HOSE, SAE #4, ADJ. TO 5/8”	2
4	86424	HOSE 3/8”ID X 20”L, SEC	1
5	11562	BARB ELBOW 90, 3/8HOSE X 1/8MPT	1
6	10864	NUT, HEX PANEL 1/8-27 NPSM ZINC	1

ILLUSTRATION 4:
10” MAGNA-TRAP® DISC ASSEMBLY

PART # 100053

Note:
See pages 16 - 19 for available MAGNA-TRAP® Tooling.

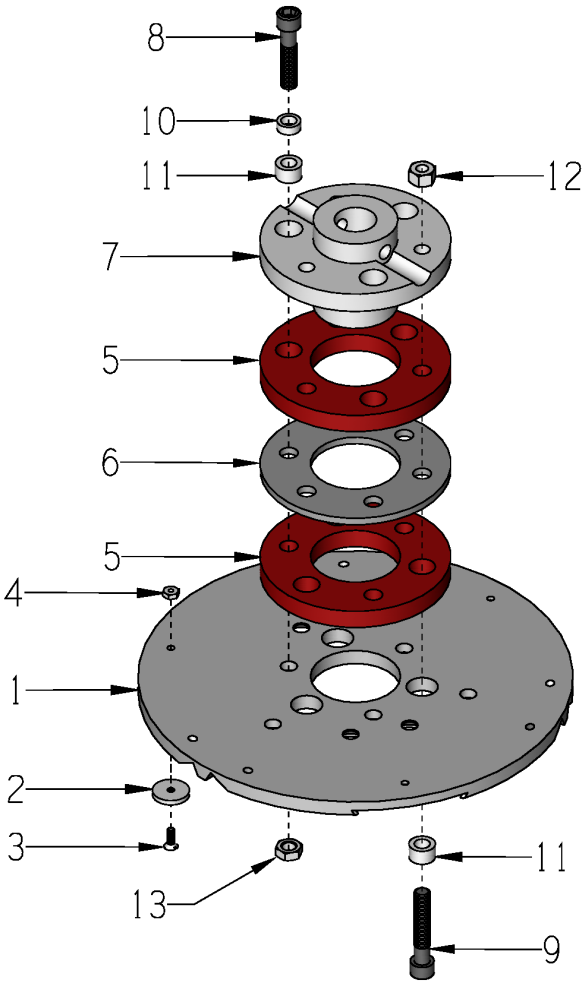

ITEM #	PART #	DESCRIPTION	QTY.
1-13	100053	10” MAGNA-TRAP DISC ASSY. W/ HUB (INCLUDES ALL ITEMS 1 THRU 13)	1
1	100054	10” UNIVERSAL MAGNA-TRAP DISC (INCLUDES ITEM 2)	1
2	36064	MAGNET, NEODYMIUM RING 7/8 X 1/8 (RECOMMENDED REPLACEMENT PART # 36975)	3
3	10647	SCREW, FLAT HD PHILLIPS 8-32 X 1/2	3
4	10462	NUT, KEPS LOCK 8-32 ZINC	3
5	100055	RING, RUBBER, 4-1/2”OD X 1/2”THK	2
6	100056	HUB, GRINDER DISC	1
7	100057	HUB, ALUMINUM 6-HOLE (GRINDER)	1
8	10354	SCREW, SKT. HD. CAP 3/8-24 X 1-3/4	3
9	10012	SCREW, SKT. HD. CAP 3/8-24 X 2	3
10	10113	SPACER, STEEL 9/16OD X 3/8ID X 7/32	3
11	10011	SPACER, STEEL 5/8OD X 3/8ID X 3/8T	6
12	10058	NUT, HEX LOCK 3/8-24 W/ NYLON PATCH	3
13	11725	NUT, HEX JAM 3/8-24 ZINC (USE RED LOCTITE)	3

ILLUSTRATION 5: OPTIONAL DIAMOND DISC ADAPTER

PART # 77618

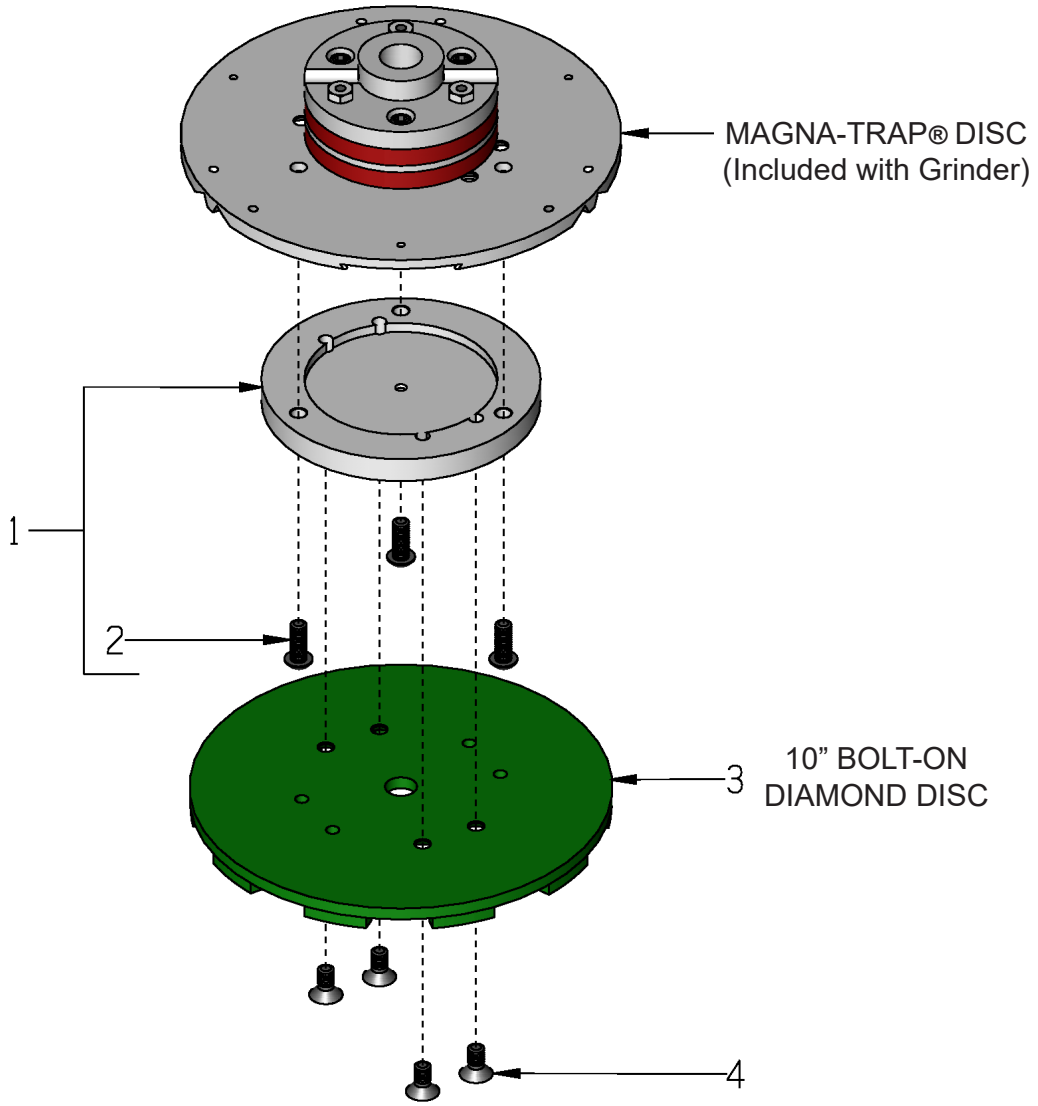

ITEM #	PART #	DESCRIPTION	QTY.
1	77618	ADAPTER, DIAMOND DISC (INCLUDES ITEM 2)	1
2	10855	SCREW, SKT. BUTTON HD 3/8-24 X 1	3
3*	- - - - -	DIAMOND DISC (NOT INCLUDED) REFER TO PRODUCT CATALOG FOR OPTIONS.	1*
4*	86108	SCREW, FLAT HD SKT 3/8-24 X 3/4 (NOT INCLUDED)	4*
*ITEMS 3 AND 4 ARE NOT INCLUDED WITH THE DISC ADAPTER.			

ILLUSTRATION 6: MOTOR & BELT DRIVE GROUPING

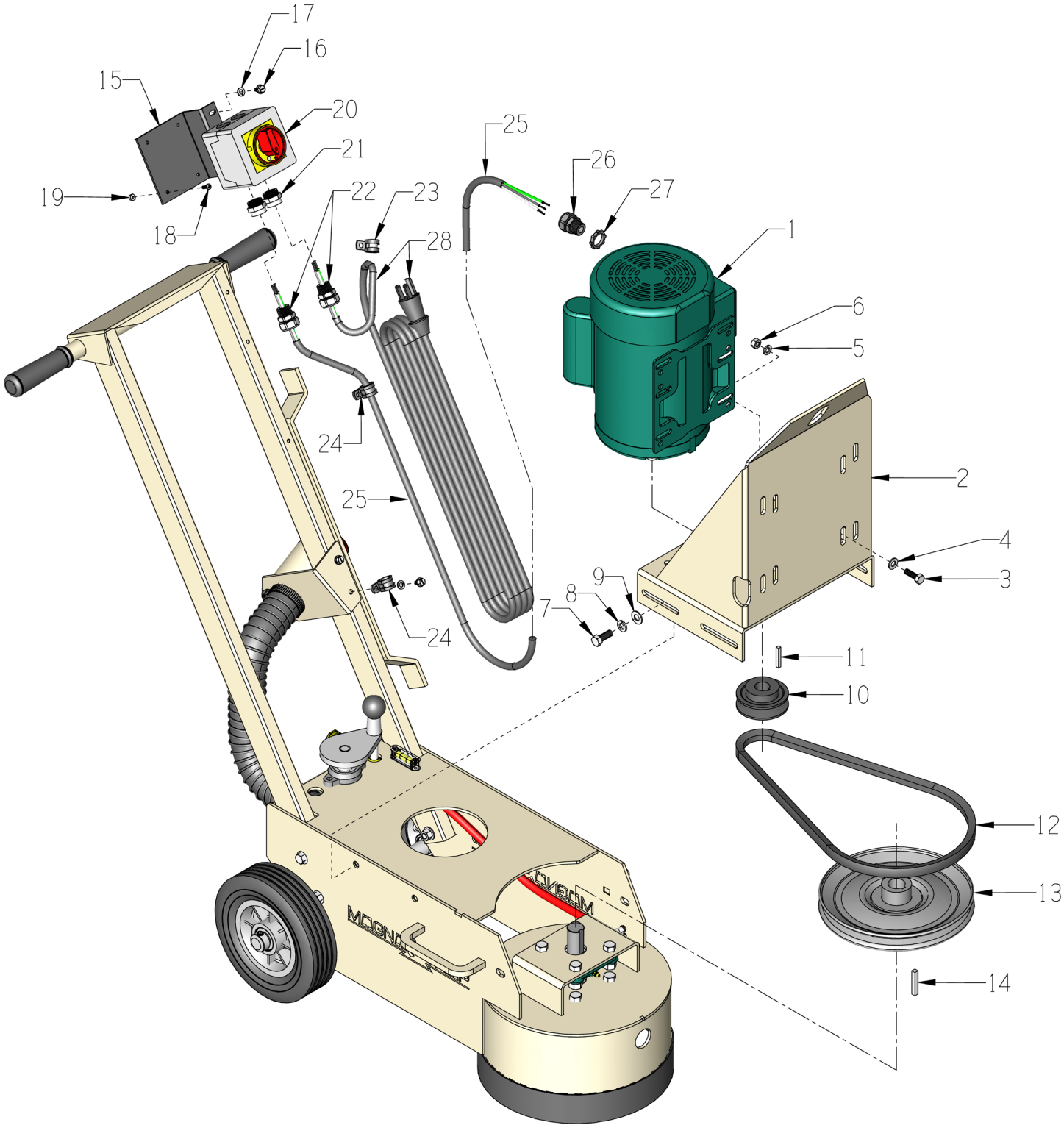

PARTS LISTING - ILLUSTRATION 6: MOTOR & BELT DRIVE GROUPING			
ITEM #	PART #	DESCRIPTION	QTY.
1	**16077**	**MOTOR, 1.5HP-1PH-60HZ-1725RPM-115/230V-13/6.5A**	**1**
		LEESON CAT. NO. 113769.00 WATT-SAVER	
		REPLACEMENT PARTS:	
	16178.....	.....CAPACITOR, START, LEESON 003025.15 (500MFD 125V)	1
	16174.....	.....CAPACITOR, RUN, LEESON 003014.02 (50MFD 240V)	1
	16179.....	.....RESET BUTTON, LEESON 300033.02 (CED2705)	1
	16060	**MOTOR, 1.75HP-1PH-50HZ-1425RPM-110/220V**	**1**
		LEESON CAT. NO. 117051.00 RED FARM-DUTY	
		REPLACEMENT PARTS:	
	16191	.....CAPACITOR, START, LEESON 003025.11 (650MFD 125V)	1
	16183	.....CAPACITOR, RUN, LEESON 003014.13 (65MFD 240V)	2
	16133	.....RESET BUTTON, LEESON 300117.04 (BRJ42DA)	1
2	86404	MOUNT, MOTOR, SEC TG10 TMC7	1
3	10806	SCREW, CAP 5/16-18 X 1	4
4	10213	WASHER, FLAT 5/16 SAE ZINC	4
5	10801	WASHER, LOCK 5/16 ZINC	4
6	10054	NUT, HEX 5/16-18 ZINC	4
7	10055	SCREW, CAP 3/8-16 X 1	4
8	10811	WASHER, LOCK 3/8 ZINC	4
9	10025	WASHER, FLAT 3/8 SAE ZINC	4
10	3613	SHEAVE 3”OD X 1GR.B X 5/8”BORE (60 Hz MOTOR)	1
	77017	SHEAVE 3”OD X 1GR.B X 7/8”BORE (50 Hz MOTOR)	1
11	N/A	KEY 3/16”SQ. X 1-3/8 (INCLUDED W/ MOTOR)	1
12	10290	BELT B-35	1
13	86009	SHEAVE 9” OD X 1GR.B X 1” BORE	1
14	40317	KEY 1/4SQ X 1-5/8	1
15	77042	BRACKET, ROTARY CAM SWITCH	1
16	10846	SCREW, CAP STSHW 1/4-20 X 5/8	2
17	10038	WASHER, LOCK 1/4 ZINC	2
18	11663	SCREW, MACHINE 8-32 X 1/2 RHCD ZINC	4
19	10462	NUT, KEPS LOCK 8-32 ZINC	4
20	**77043**	**SWITCH, ROTARY CAM ON/OFF**	1
		REPLACEMENT PARTS:	
	77043-2.....	.....SWITCH HANDLE, PADLOCKABLE, LOVATO	1
	77043-4.....	.....GASKET RING, OPERATOR, LOVATO	1
21	77043-1	SWITCH ADAPTER, PG16 TO 1/2”NPT	2
22	40066	STRAIN RELIEF 1/2NPT X .350-.450”	2
23	11690	CLAMP, LOOM, 3/8”	1
24	11565	CLAMP, LOOM, 5/8” (SAE SIZE 10)	2
25	77045	WIRE HARNESS 12/3 X 42”LOA	1
26	16176	STRAIN RELIEF 3/4NPT X .350-.450”	1
27	10740	CONDUIT LOCK NUT 3/4 NP (LOCATED INSIDE JUNCTION BOX)	1
28	86422	CORD W/ PLUG, 25FT. POWER	1

WIRING DIAGRAM FOR SWITCH

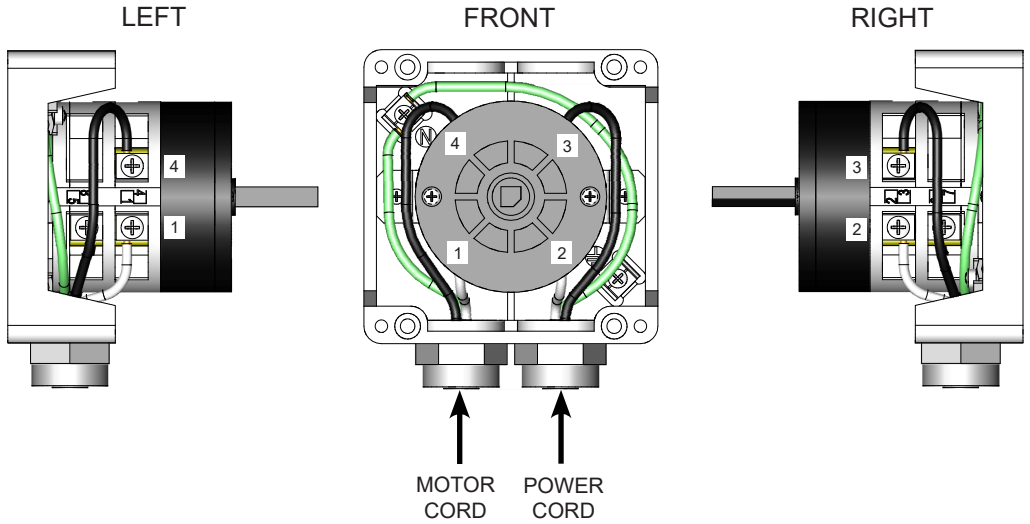

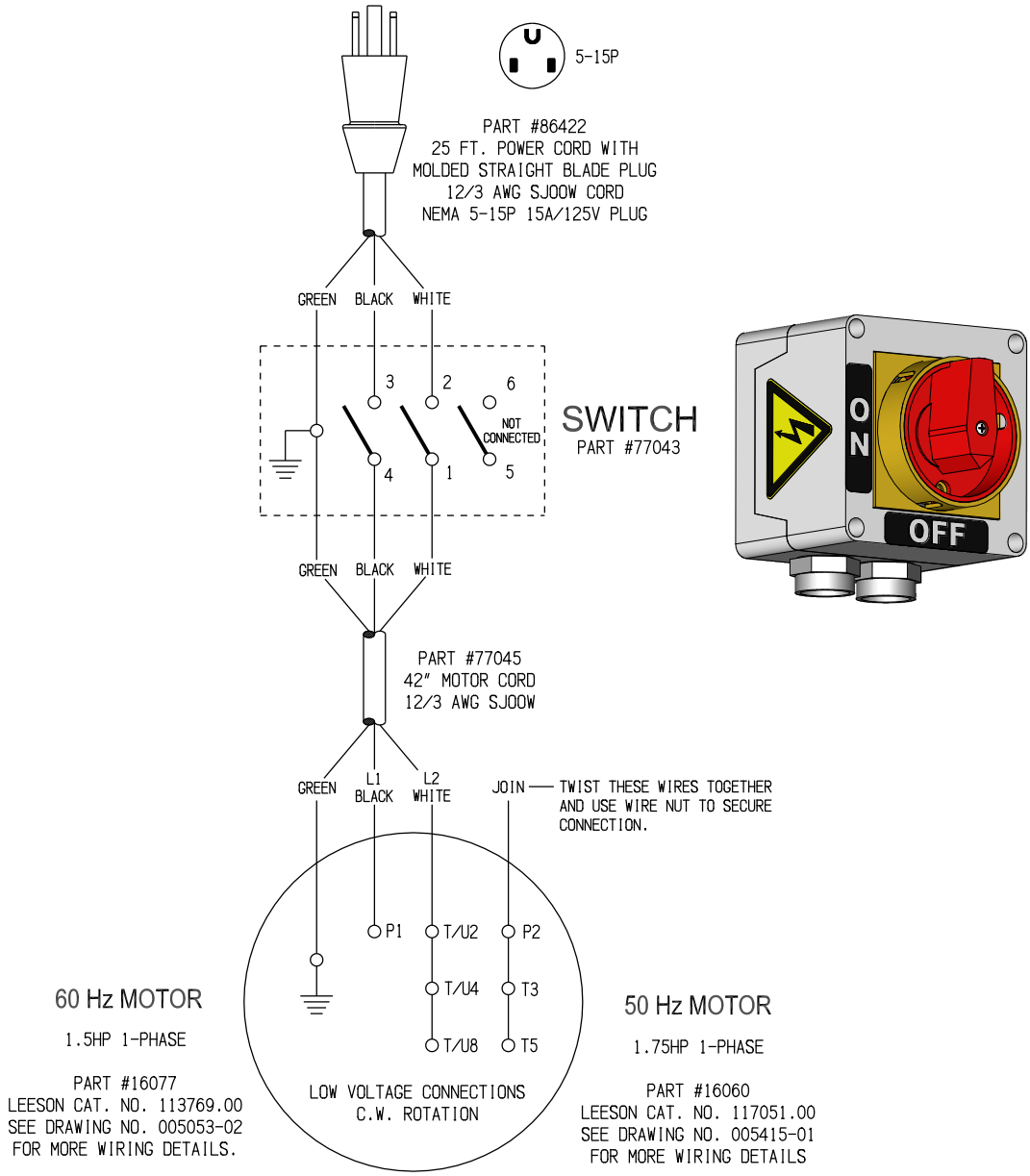

WIRING DIAGRAM FOR 60Hz MOTOR

LEESON CAT. NO. 113769.00

USE CONNECTIONS FOR CLOCK-WISE (C.W.) ROTATION SHOWN BELOW IN CHART
MOTOR CORD: BLACK WIRE - L1, WHITE WIRE - L2, GREEN WIRE - GROUND
LOW VOLT (115V) STANDARD, HIGH VOLT (230V) OPTIONAL

005053–02

VIEW FROM OUTSIDE OF MOTOR AT SWITCH END.

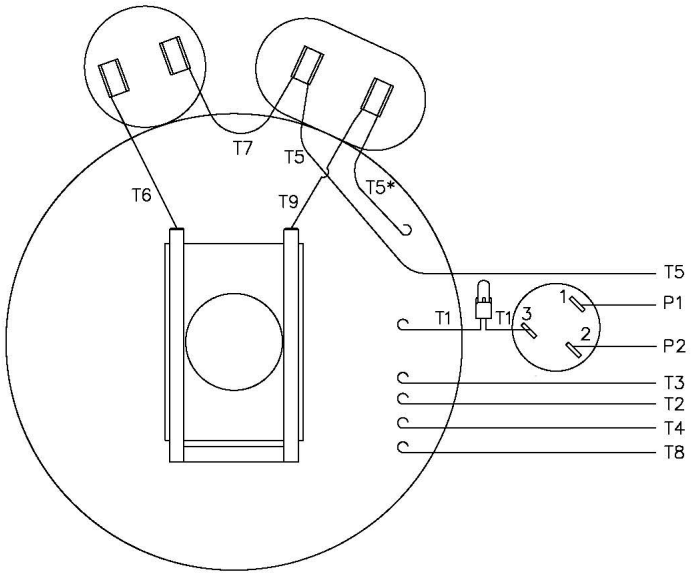

LINE LEADS

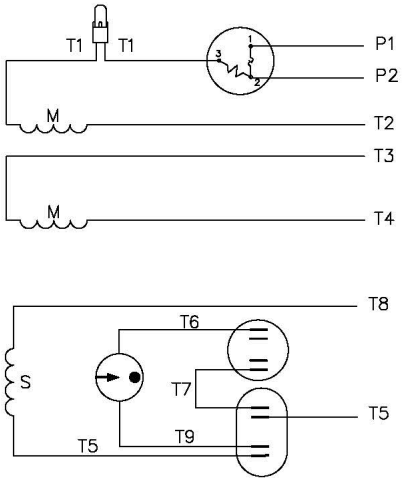

	ROTATION FACING LEAD END	L1	L2	JOIN	INSULATE SEPARATELY
HIGH VOLT	C.C.W.	P1	T4 T5	T2,T3 T8	P2
	C.W.	P1	T4 T8	T2,T3 T5	P2
LOW VOLT	C.C.W.	P1	T2,T4 T5	P2,T3 T8	------
	C.W.	P1	T2,T4 T8	P2,T3 T5	------

* THIS LEAD MAY BE WHITE

NO.	REVISION	BY & DATE
04	ADDED "*" TO T5	RLW 7/22/02
03	REDRAWN ON CAD	DBT 05/27/97

TOLERANCES UNLESS SPECIFIED

DEC.	INCHES
.X	±.1
.XX	±.01
.XXX	±.005
.XXXX	±.0005
ANG	±1/2°

REGAL-BELOIT Motor Technologies Group

TITLE: EXTERNAL WIRING DIAGRAM TYPE "K" W/PROTECTOR

MAT'L. DECAL 004011

FINISH

CAD FILE 00505302

RFP

DIST

DRAWN ADH 06/16/76
CHK WRK 06/30/76
APPD
SCALE 1=1
REF
FMF 6K17FB8A
PREV

SIZE A | DRAWING NO. 005053–02 | REV. 04

THIS DRAWING IN DESIGN AND DETAIL IS OUR PROPERTY AND MUST NOT BE USED EXCEPT IN CONNECTION WITH OUR WORK ALL RIGHTS OF DESIGN AND INVENTION ARE RESERVED
THIS IS AN ELECTRONICALLY GENERATED DOCUMENT – DO NOT SCALE THIS PRINT

6/28/2007 5:11:39 PM -

WIRING DIAGRAM FOR 50Hz MOTOR

LEESON CAT. NO. 117051.00

USE CONNECTIONS FOR CLOCK-WISE (C.W.) ROTATION SHOWN BELOW IN CHART
MOTOR CORD: BLACK WIRE - L1, WHITE WIRE - L2, GREEN WIRE - GROUND
LOW VOLT (110V) STANDARD, HIGH VOLT (220V) OPTIONAL

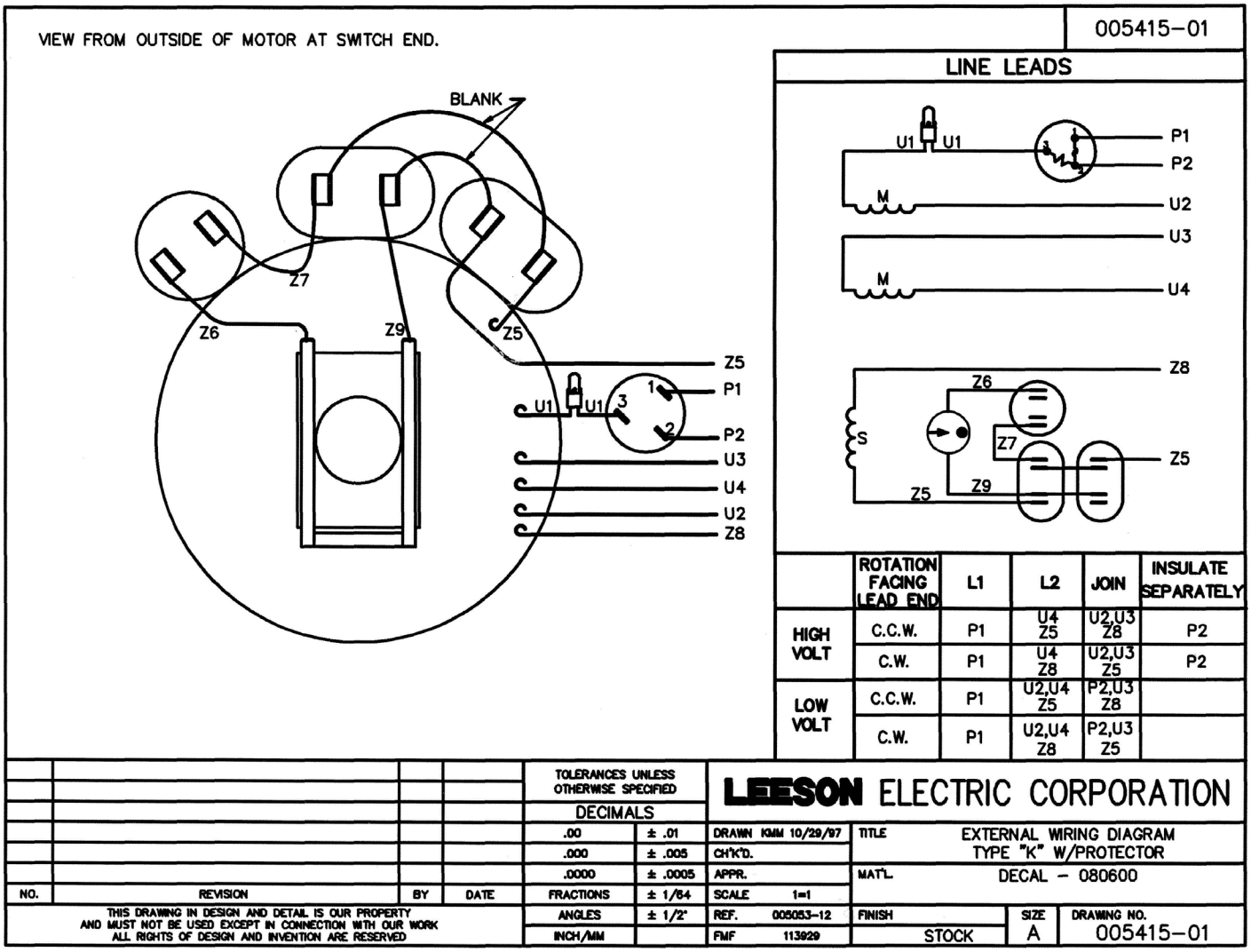

	ROTATION FACING LEAD END	L1	L2	JOIN	INSULATE SEPARATELY
HIGH VOLT	C.C.W.	P1	U4 Z5	U2,U3 Z8	P2
	C.W.	P1	U4 Z8	U2,U3 Z5	P2
LOW VOLT	C.C.W.	P1	U2,U4 Z5	P2,U3 Z8	
	C.W.	P1	U2,U4 Z8	P2,U3 Z5	

DECAL SHEET

P/N 92211 Rev.J SEC-NG 14 x 17
FLOOR GRINDERS
SCAN FOR TRAINING MATERIAL
EDCO
EDCO
edcoinc.com 1-800-638-3326
THE HOME DEPOT
SCAN FOR TRAINING MATERIAL
EDCO
CAUTION
GENERATOR SIZE REQUIREMENT
RATE GENERATOR AT 3 TIMES MOTOR RATED HORSEPOWER
UK CA
RENTAL-TOUGH
YOU MUST READ OPERATOR'S INSTRUCTION MANUAL BEFORE OPERATING
THE HOME DEPOT RENTAL
THE HOME DEPOT
SCAN FOR TRAINING MATERIAL
EDCO
exceeds 85dBA
EDCO
STAYED IN AMERICA
FREDERICK, MARYLAND
kg
WARNING: Cancer and Reproductive Harm.
For more information, go to www.P65Warnings.ca.gov
MAGNATRAP
GREASE BEARINGS
WEEKLY
For OSHA Silica Compliance use with EDCO Vacuum
SWITCH & MOTOR
115 VOLTS
SINGLE PHASE
220 VOLTS
LEVEL CONTROL
UP
DN
ON
OFF
ROTATION

ITEM		PART NUMBER / NAME	APPLICATION
1		**12501LC** **MAGNA-BLADE COMPLETE, LEFT** (Pack of 3)	Flaking Paint, Glue & Adhesives, Soft Thinset/Mortar, Industrial buildups, Foam rubber carpet backing - **CSP Rating: 0 -** *Lasts 1 to 2 hours per side x8 sides*
2		**300101** **PRO TUNGSERT III, 8 SIDED CARBIDE** (Pack of 6)	Replacement Pack for the Magna-Blade - **CPS Rating: 0 -** *Lasts 1 to 2 hours per side x8 sides*
3		**QC2S-SC-0018** **DYMA-SEGS 18 GRIT YELLOW, SOFT CONCRETE** (Pack of 3)	Soft/Abrasive Concrete, Asphalt Grinding, Green Concrete (Less than 28 days old), Abrasive coating removal - **CSP Rating: 2**
4		**QC2S-MC-0018** **DYMA-SEGS 18 GRIT GREY, MEDIUM CONCRETE** (Pack of 3)	General Purpose Concrete Grinding, Coating Removal and Prep for Coatings - **CSP Rating: 2**
5		**QC2S-HC-0018** **DYMA-SEGS 18 GRIT RED, HARD CONCRETE** (Pack of 3)	High PSI/Non-Abrasive Concrete Grinding, Non-Abrasive Coating Removal - **CSP Rating: 2**
6		**QC2B-SC-0030** **DOUBLE DYMA DOTS 30 GRIT YELLOW, SOFT CONCRETE** (Pack of 3)	Soft/Abrasiv Concrete, Asphalt Grinding. Green Concrete (Less than 28 days old), Abrasive coating removal - **CSP Rating: 1-2**
7		**QC2B-MC-0030** **DOUBLE DYMA DOTS 30 GRIT GREY, MEDIUM CONCRETE** (Pack of 3)	General Purpose Concrete Grinding, Coating Removal and Prep for Coatings - **CSP Rating: 1-2**
8		**QC2B-HC-0030** **DOUBLE DYMA DOTS 30 GRIT RED, HARD CONCRETE** (Pack of 3)	High PSI/Non-Abrasive Concrete Grinding, Non-Abrasive Coating Removal - **CSP Rating: 1-2**
9	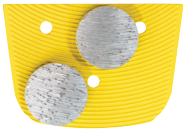	**QC2B-SC-0070** **DOUBLE DYMA DOTS 70 GRIT YELLOW, SOFT CONCRETE** (Pack of 3)	Soft/Abrasiv Concrete, Asphalt Grinding. Green Concrete (Less than 28 days old), Abrasive coating removal - **CSP Rating: 1-2**
10		**QC2B-MC-0070** **DOUBLE DYMA DOTS 70 GRIT GREY, MEDIUM CONCRETE** (Pack of 3)	General Purpose Concrete Grinding, Coating Removal and Prep for Coatings - **CSP Rating: 1-2**
11		**QC2B-HC-0070** **DOUBLE DYMA DOTS 70 GRIT RED, HARD CONCRETE** (Pack of 3)	High PSI/Non-Abrasive Concrete Grinding, Non-Abrasive Coating Removal - **CSP Rating: 1-2**

	ITEM	PART NUMBER / NAME	APPLICATION
12	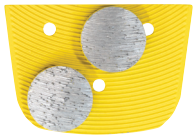	**QC2B-SC-0120** **DOUBLE DYMA-DOTS 120 GRIT YELLOW, SOFT CONCRETE** (Pack of 3)	Soft/Abrasive Concrete, Asphalt Grinding, Green Concrete (Less than 28 days old), Abrasive coating removal - **CSP Rating: 1- 2**
13		**QC2B-MC-120** **DOUBLE DYMA DOTS 120 GRIT GREY, MEDIUM CONCRETE** (Pack of 3)	General Purpose Concrete Grinding, Coating Removal and Prep for Coatings - **CSP Rating: 1-2**
14		**QC2B-HC-120** **DOUBLE DYMA DOTS 120 GRIT RED, HARD CONCRETE** (Pack of 3)	High PSI/Non-Abrasive Concrete Grinding, Non-Abrasive Coating Removal - **CSP Rating: 1-2**
15		**M501SC** **ECONOMY GRIND BLISTER** (Soft Concrete)	Soft/Abrasive Concrete, Asphalt Grinding, Green Concrete (Less than 28 days old), Abrasive coating removal - **CSP Rating:1-2**
16		**M501MC** **ECONOMY GRIND BLISTER** (Medium Concrete)	General Purpose Concrete Grinding, Coating Removal and Prep for Coatings - **CSP Rating: 1-2**
17	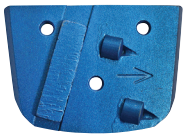	**QC-PCD1-LB** **DYMA-PCD W/ BACKER LEFT, BLUE** (Pack of 3)	Removing Industiral Coverings, Water Proofing Membrane, Cool Deck, Thick Epoxies with Scarifices backing bar. - **CSP Rating: 2-3**
18		**M401PL** **ECONOMY REMOVE BLISTER LEFT**	Stripping Industrial Coverings, Water-Proofing Membrane, Cool Deck, Thick Epoxies
19		**QC2V-MC-0030** **DYMA-SHARPS, 30 GRIT, MEDIUM CONCRETE** (Pack of 3)	Aggressive Material Stripping. Dyma-Sharps Strip and Grind Concrete in one Step while minimizing floor damage, making them great for quick surface prep - **CSP Rating: 1**
20		**QCAR-MC-0030** **DYMA- ARROW 30 GRIT, LEFT, GREY, MEDIUM CONCRETE** (Pack of 3)	Great for hard glue removal, coatings removal, and fast concrete grindings. Creates smooth surfaces and preps concrete while removing coatings in one step. Designed to tear and pull away light coverings. - **CSP Rating: 1- 2**
21		**QCAR-SC-0030-L** **DYMA- ARROW 30 GRIT, LEFT, YELLOW, SOFT CONCRETE** (Pack of 3)	Great for hard glue removal, coatings removal, and fast concrete grindings. Creates smooth surfaces and preps concrete while removing coatings in one step. Designed to tear and pull away light coverings. - **CSP Rating: 1- 2**

	ITEM	PART NUMBER	DESCRIPTION
22		**QCPK-MC-0030-L** **DYMA-PEAK LEFT, GREY** (Pack of 3)	These are designed to grind/remove concrete aggressivly while leaving minimal damage to the floor. - **CSP Rating: 1**
23		**QC2S-RA-0030** **DYMA-RAPIDA, EXTREMELY HARD CONCRETE** (Pack of 3)	Perfect for hard troweled concrete with water solvent based curing agents. Keeps diamonds from overheaing and glazing, ensuring smooth grinding and consistent production, whether wet or dry, when other soft bond tools fail. - **CSP Rating: 1-2**
24	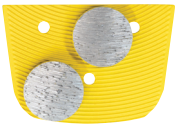	**XL2B-SC-0030** **XL DOUBLE DYMA-DOTS 30 GRIT YELLOW, SOFT CONCRETE** (Pack of 3)	**30% Larger Segments - Lasts 30% Longer.** Soft/Abrasive Concrete, Asphalt Grinding,Green Concrete (Less than 28 days old) Abrasive coatings removal. **CSP Rating: 1-2**
25		**XL2B-MC-0030** **XL DOUBLE DYMA-DOTS 30 GRIT GREY, MEDIUM CONCRETE** (Pack of 3)	**30% Larger Segments - Lasts 30% Longer.** General Purpose Concrete Grinding, Coating Removal and Prep for Coatings. **CSP Rating: 1-2**
26		**XL2B-HC-0030** **XL DOUBLE DYMA-DOTS 30 GRIT RED, HARD CONCRETE** (Pack of 3)	**30% Larger Segments - Lasts 30% Longer.** High PSI/ Non-Abrasive Concrete Grinding, Non-Abrasive Coating Removal - **CSP Rating: 1-2**
27		**XL2S-MC-0006** **XL DYMA-SEGS 6 GRIT, GREY, MEDIUM** (Pack of 3)	**30% Larger Segments - Lasts 30% Longer**. General Purpose Concrete Grinding. Coating Removal and Prep for Coatings. - **CSP Rating: 2**
28		**XL2S-SC-0018** **XL DYMA-SEGS 18 GRIT , YELLOW, SOFT** (Pack of 3)	**30% Larger Segments - Lasts 30% Longer.** Soft/Abrasive Concrete/Asphalt Grinding. Green Concrete (Less than 28 Days Old) Abrasive Coating Removal. - **CSP Rating: 2**
29		**XL2S-MC-0018** **XL DYMA-SEGS 18 GRIT , GREY, MEDIUM** (Pack of 3)	**30% Larger Segmants- Lasts 30% Larger.** General Purpose Concrete Grinding. Coating Removal and Prep for Coatings. - **CSP Rating: 2**
30		**XL2S-HC-0018** **DYMA-SEGS 18 GRIT RED, HARD CONCRETE** (Pack of 3)	**30% Larger Segmants- Lasts 30% Larger.** High PSI/ Non-Abrasive Concrete Grinding, Non-Abrasive Coating Removal - **CSP Rating: 2**

ITEM		PART NUMBER	DESCRIPTION
31	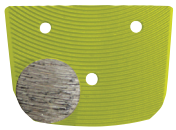	**QC1B-SC-0030** **SINGLE DYMA-DOT 30 GRIT YELLOW, SOFT CONCRETE** (Pack of 3)	Abrasive Concrete/Asphalt and New Concrete - (Less than 28 Days Old). - **CSP Rating: 1**
32		**QC1B-MC-0030** **SINGLE DYMA-DOT 30 GRIT GRAY, MEDIUM CONCRETE** (Pack of 3)	General Purose Concrete Grinding. Coating Rval and Prep for New Coatings.. - **CSP Rating: 1**
33	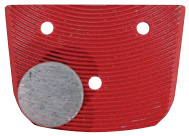	**QC1B-HC-0030** **SINGLE DYMA-DOT 30 GRIT RED, HARD CONCRETE** (Pack of 3)	Non Abrasive or High PSI Concrete Grinding Non-Abrasive Coating Removal. - **CSP Rating: 1**
34	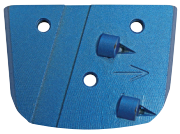	**QC-PCD1-L** **DYMA-PCD LEFT, BLUE** (Pack of 3)	Aggressive Removal of Industrial Coverings. Water-Proofing Membrane, Cool Deck, Thick Epoxies. - **CSP Rating: 2 - 3**
35		**QC2C-PCD** **DYMA-CRUSH** (Pack of 3)	Ideal for Hard Coatings and Glue Removal. Leaves a Relatively light texture, similar to a Shot Blast Finish. **CSP Rating: 3**

THIS PAGE LEFT BLANK INTENTIONALLY

LIMITED EQUIPMENT WARRANTY OF SALE

Equipment Development Company, Inc. herein referred to as EDCO (Seller) warrants that each new unit manufactured by EDCO to be free from defects in material and workmanship in normal use and service for a period of (1) one year (except for the cutter drum assembly on all model concrete/asphalt planers AND the chisel head assembly on all model ALR's & ALR-BS in which case the warranty period shall be 90 days) from date of shipment to the original retail or equipment rental center owner.

Accessories or equipment furnished and installed on the product by EDCO but manufactured by others, including, but not limited to engines, motors,electrical components, transmissions etc., shall carry the accessory manufacturers own warranty.

EDCO will, at its option, repair or replace, at the EDCO factory or at a point designated by EDCO, any part which shall appear to the satisfaction of EDCO inspection to have been defective in material or workmanship.

EDCO reserves the right to modify, alter and improve any part or parts without incurring any obligation to replace any part or parts previously sold without such modified, altered or improved part or parts.

This warranty is in lieu of and excludes all other warranties, expressed, implied, statutory, or otherwise created under applicable law including, but not limited to the warranty of merchantability and the warranty of fitness for a particular purpose in no event shall seller or the manufacturer of the product be liable for special, incidental, or consequential damages, including loss of profits, whether or not caused by or resulting from the negligence of seller and/or the manufacturer of the product unless specifically provided herein. In addition, this warranty shall not apply to any products or portions there of which have been subjected to abuse, misuse, improper installation, maintenance, or operation, electrical failure or abnormal conditions and to products which have been tampered with, altered, modified, repaired, reworked by anyone not approved by seller or used in any manner inconsistent with the provisions of the above or any instructions or specifications provided with or for the product.

TERMS AND CONDITIONS

(NOT APPLICABLE TO SALES THROUGH AUTHORIZED DISTRIBUTION)

FORCE MAJEURE

Seller's obligation hereunder are subject to, and Seller shall not be held responsible for, any delay or failure to make delivery of all or any part of the Product due to labor difficulties, fires, casualties, accidents, acts of the elements, acts of God, transportation difficulties, delays by a common carrier, inability to obtain Product, materials or components or qualified labor sufficient to timely perform part of or all of the obligations contained in these terms and conditions, governmental regulations or actions, strikes, damage to or destruction in whole or part of manufacturing plant, riots, terrorist attacks or incidents, civil commotions, warlike conditions, flood , tidal waves, typhoon, hurricane, earthquake, lightning, explosion or any other causes, contingencies or circumstances within or without the United States not subject to the Seller's control which prevent or hinder the manufacture or delivery of the Products or make the fulfillment of these terms and conditions impracticable. In the event of the occurrence of any of the foregoing, at the option of Seller, Seller shall be excused from the performance under these Terms and Conditions, or the performance of the Seller shall be correspondingly extended.

This document sets forth the terms and conditions pursuant to which the purchaser ("Purchaser") will purchase and Equipment Development Co.Inc. ("Seller")will sell the products, accessories, attachments (collectively the Products ") ordered by the Purchaser. These terms and conditions shall govern and apply to the sale of Seller's Products to Purchaser, regardless of any terms and conditions appearing on any purchase order or other forms submitted by Purchaser to Seller, or the inconsistency of any terms therein and herein.

1. PRICE

All prices set forth on any purchase order or other document are F.O.B. Sellers facility or distribution point, as may be determined by Seller (F.O.B.Point). All prices are exclusive of any and all taxes, including, but not limited to, excise, sales, use, property or transportation taxes related to the sale or use of the Products, now or hereafter imposed, together with all penalties and expenses. Purchaser shall be responsible for collecting and/or paying any and all such taxes, whether or not they are stated in any invoice for the Products. Unless otherwise specified herein, all prices are exclusive of inland transportation, freight, insurance and other costs and expenses relating to the shipment of the Products from the F.O.B. point to Purchaser's facility. Any prepayment by Seller of freight insurance and other costs shall be for the account of Purchaser and shall be repaid to Seller.

2. PAYMENT TERMS

Payment terms are as follows. 2% 10 days (to approved and qualified accounts). Net 30 days. This is a cash discount for invoices paid within 10 days after the invoice date, regardless of date of receipt of shipment. This is not a trade discount and will not be granted to accounts that do not adhere to stated terms.

*All past due accounts are subject to a late payment fee of 1.5% per month or a maximum allowed by law if different, along with the expenses incidental to collection including reasonable attorney's fees and costs.

*Seller reserves the right to hold shipments against past due accounts.

*Seller reserves the right to alter payment terms.

3. FREIGHT TERMS

All shipments will be made F.O.B. shipping point as designated in these Terms and Conditions, and title shall pass at the F.O.B. point. Delivery to the initial common carrier shall constitute delivery to the Purchaser. Any claims for loss or damage during shipment are to be filed with carrier by the Purchaser. Seller will not assume responsibility for the performance of the carrier.

Back orders will be shipped in the most practical fashion with charges consistent with our freight policy established with the original order. UPS, FED EX, MAIL or shipments by other couriers are subject to the same terms and conditions as outlined in paragraph #3"Freight Terms".

4. DELIVERY, DAMAGES, SHORTAGES

Seller shall use reasonable efforts to attempt to cause the Products to be delivered as provided for in these Terms & Conditions. Delivery to the initial common carrier shall constitute the delivery to the Purchaser. Sellers responsibility, in so far as transportation risks are concerned ceases upon the delivery of the Products in good condition to such carrier at the F.O.B. point and all the Products shall be shipped at the Purchaser's risk. Seller shall not be responsible or liable for any loss of income and/or profits, or incidental, special, consequential damages resulting from Seller's delayed performance in shipment and delivery.

5. RETURN OF DEFECTIVE PRODUCTS

Defective or failed material shall be held at the Purchaser's premises until authorization has been granted by Seller to return or dispose of Products. Products that are to be returned for final inspection must be returned Freight Prepaid in the most economical way. Credit will be issued for material found to be defective upon Seller's inspection based on prices at time of purchase.

6. PRODUCTS ORDERED IN ERROR

Products may be returned, provided that claim is made and Seller is notified within 7 days of receipt of Products, and the Products are in original buyer's possession not more than 30 days prior to return, subject to Seller's approval. If Products are accepted for return, they must be Freight Prepaid and buyer will be charged a minimum of 15% restocking charge, plus a charge back for outbound freight charges if the original order was shipped prepaid. Returns are not accepted for any Products that are specifically manufactured to meet the buyer's requirement of either specifications or quantity.

AGREEMENTS

These Terms and Conditions constitute the entire agreement between Seller and Purchaser as it relates to terms and conditions of sale, and supersedes any and all prior oral or written agreements, correspondence, quotations or understandings heretofore in force between the parties relating to the subject matter hereof. There are no agreements between Seller and Purchaser with respect to the Product herein except those specifically set forth in and made part of these terms and conditions. Any additional terms, conditions and/or prices are rejected by Seller.

These terms and conditions may be modified, cancelled or rescinded only by a written agreement of both parties executed by their duly authorized agents.

USE ONLY GENUINE EDCO PARTS & ACCESSORIES

For your own safety, the safety of others and the life of your machine.

SUBMIT ALL WARRANTY CLAIMS AT:

www.edcoinc.com/customer-support

STOP

BEFORE USING THIS PRODUCT

Have You Used EDCO's Online Customer Support??

Scan This QRC or Visit
www.edcoinc.com/customer-support

READ: **EDCO Owner's Manuals and Parts Listings** share basic information and parts of each product. Download and print them whenever needed.

WATCH: **EDCO Product Training Videos** show how to use products, install tooling, and perform basic maintenance.

EDCO SCAN FOR TRAINING MATERIAL

Example Only

FIND: Somewhere on this product is an **EDCO QRC Training Decal**. Scanning this code provides owner's information, videos, and other training content anywhere/anytime on your mobile device.

PROFESSIONAL EDCOED TRAINING

CONCRETE KNOWLEDGE

JOIN: **EDCOed.com** is a free, 24-hour training space. Each certification track focuses on a specific EDCO product group. The information in these tracks help businesses be successful with those products.

EDCO is always updating online training / information so you always have the most recent content.

Also see Operator's Safety & Limited Warranty Manual

Equipment Development Co., Inc. • 800.638.3326 • techsupport@edcoinc.com